POLE CHART

POLE PART NUMBER	HEIGHT (ft)	WEIGHT (Lbs)	CALCULATED DEFLECTION @ 70 mph	CALCULATED DEFLECTION @ 55 mph	CALCULATED DEFLECTION @ 30 mph	SHAFT DIMENSIONS AND DETAILS								BASE PLATE DETAILS		TOP PLATE PART NUMBER
						PART NUMBER	LENGTH (ft)	AFB (in)	AFT (in)	THK** (in)	DWB (in)	DBT (in)	MATERIAL	PART NUMBER	"B" THICK	
9013-16-0001-25	25	551	0.6"	0.2"	0.1"	200-16-01-001-25	25	12.5	9	0.1345	34.05	27.41	A1011 GR.50	211-16-01-001-25	1"	210-00-L04-013-25
9013-16-0001-30	30	637	1.0"	0.3"	0.3"	200-16-01-001-30	30	13	9	0.1345	40.63	27.41	A1011 GR.50	211-16-01-001-30	1"	210-00-L04-013-25
9013-16-0001-35	35	716	1.4"	0.4"	0.3"	200-16-01-001-35	35	14.5	9	0.1345	45.41	27.41	A1011 GR.50	211-16-01-001-35	1-1/4"	210-00-L04-013-25
9013-16-0001-40	40	1199	1.3"	0.4"	0.3"	200-16-01-001-40	40	15.5	10	3/16	48.31	30.81	A572 GR.50	211-16-01-001-40	1-1/4"	210-00-L04-013-40
9013-16-0001-45	45	1431	1.4"	0.5"	0.4"	200-16-01-001-45	*45	17	11	3/16	53.08	33.99	A572 GR.50	211-16-01-001-45	1-1/4"	210-00-L04-013-45
9013-16-0001-50	50	2041	1.4"	0.5"	0.4"	200-16-01-001-50	*50	18	11	1/4	55.93	33.66	A572 GR.50	211-16-01-001-50	1-1/4"	210-00-L04-013-45

*Poles with 45' & 50' heights have two sections.

Notes:

1. DESIGN STANDARDS: AASHTO 2001-Standard Specifications for Structural Support for Highway, Signs, Luminaires, and Traffic Signals.
   1.1. Design wind speed - 90 mph
   1.2. Design life/recurrence interval - 50 years.
   1.3. Loading: (1) Camera - EPA 4 sq. ft. @ 2 ft above top of pole and (1) Dish - EPA 1 sq. ft. @ top of the pole.
2. WELDING: All welding per latest edition of AWS Structural Welding Code D1.1 Steel.
3. FINISH: All steel shall be hot dip galvanized after fabrication as per ASTM A123/A153. The Silicone content of the galvanized steel shall be Si <=0.04% or 0.15% <= Si <=0.25%
4. Anchor bolt plates and anchor bolts are supplied only if required.
5. Maximum allowed deflection:1.4" @ 70 mph and 0.7" @ 30 mph.
6. Customer to confirm the dimensions of the camera mounting plate (bolt circle diameter, bolt holes & thickness) and the connection bolt size prior to fabrication.
7. **0.1345" is nominal thickness. Minimum thickness is 0.1265".

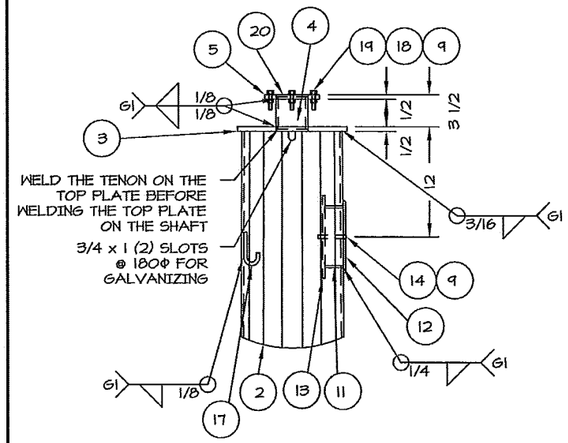

DETAIL B

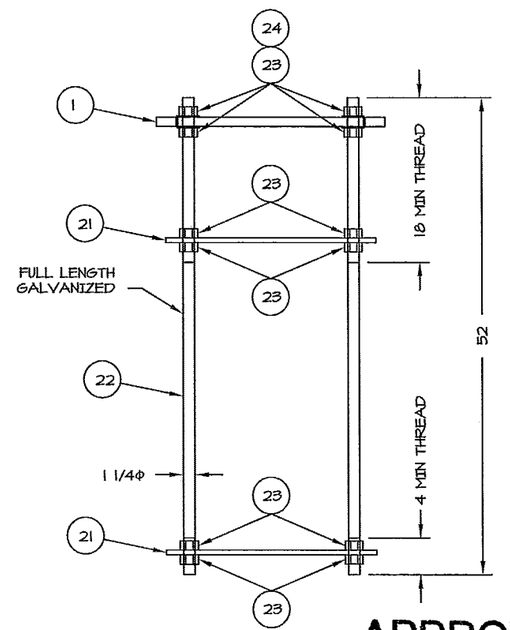

ANCHOR BOLT CAGE

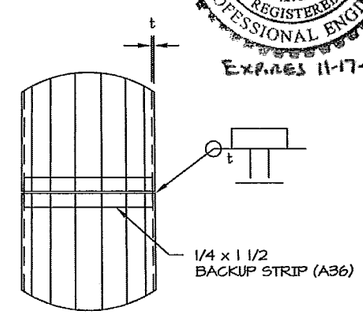

DETAIL D BUTT WELD
(ONLY FOR 45' & 50' POLES)
NO SPLICE IN BOTTOM THIRD OF POLE HEIGHT

THOMAS S. LYNCH
STATE OF WASHINGTON
42082
REGISTERED
PROFESSIONAL ENGINEER
1-8-09
Expires 11-17-10

APPROVED
Manufacturer's Pole Plan
Approved For Listing As A
Pre-Approved Drawing
WSDOT Bridge & Structures Office
By GB Date 1/13/2009

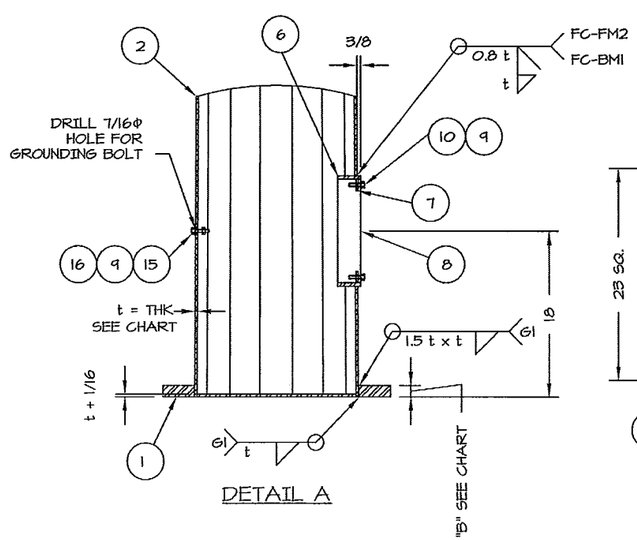

DETAIL A

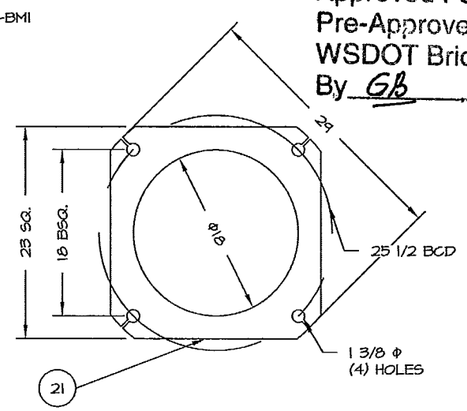

ANCHOR PLATE DETAIL
211-TP-0017

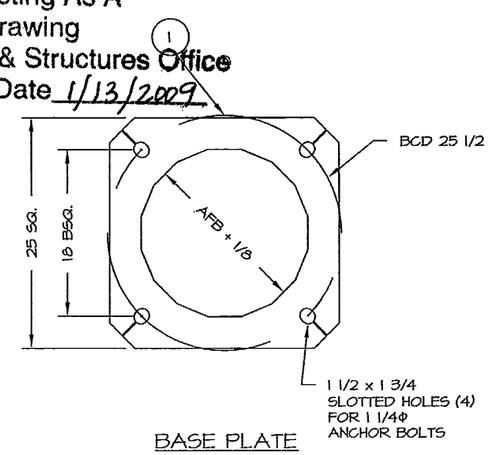

BASE PLATE DETAIL

BILL OF MATERIALS FOR POLE ASSEMBLY

#	QTY	PART NUMBER	DESCRIPTION	MATERIAL
1	1	See Chart	Base plate, 25" SQ., 25-1/2" BCD, Thickness - See Chart	A572 GR.50
2	1	See Chart	16 Sided Shaft, See Chart	See Chart
3	1	See Chart	Top Plate, 3-9/16" ID., 1/2" Thick	A36/A572 GR.50
4	1	121-3.00-0010	3" Sch.40 Pipe, 3-1/2" OD, Length 3-1/2"	A53 GR.B
5	1	210-00-L04-01	Camera Mounting Plate, 6" O.D., 4-3/4" BCD., 1/2" Thick	A36/A572 GR.50
6	1	230-RG-FL04	Hand Hole Ring, 5-3/8" x 12" x 2-1/2", 3/8" Thick	ASTM A36
7	2	230-TA-F03	Hand Hole Tab, 1/4" Thick	ASTM A36
8	1	230-CO-FL01	Hand Hole Cover, 5-7/8" x 12-1/2", 10GA Thick	A1011-50
9	14	154-FWN-5011	3/8" Flat Washer Narrow	18-8 SS
10	2	151-HRS-0.375-08	3/8"-16 Hex Head Regular Bolt, Length 1-1/4", Full Thread	18-8 SS
11	1	230-RG-F03	Hand Hole Ring, 4-1/4" x 6-3/4" x 2", 1/4" Thick	ASTM A36
12	1	230-CO-F01	Hand Hole Cover, 10GA Thick	A1011-50 or A36
13	1	230-CB-00001	Cover Bar, 1/4" x 1-1/2" Flat Bar, Length 9"	ASTM A36
14	1	151-HRS-0.375-23	3/8"-16 Hex Head Regular Bolt, Length 3"	18-8 SS
15	1	151-HRS-0.375-10	3/8"-16 Hex Head Regular Bolt, Length 1-1/2", Full Thread	18-8 SS
16	2	153-HRN-5005	3/8"-16 Hex Regular Nut	18-8 SS
17	1	245-JH-00001	J Hook, 3/8"Φ Hot Rolled Round, Length 5-7/16	ASTM A36
18	4	153-HL-5005	3/8"-16 Hex Nylon-Insert Locknut	18-8 SS
19	4	151-HRS-0.375-135	3/8"-16 Hex Head Regular Bolt, Length 1-3/4", Stainless Steel	ASTM F593
20	1	220-SQ-00002-07	Cover Plate, 4-3/4" SQ., 4-3/4" BCD, 1/8" or 10GA Thick.	A36/A607 GR.50
BILL OF MATERIALS FOR ANCHOR BOLT CAGE				
21	2	211-TP-0017	Anchor Plate, 23" SQ., 25-1/2" BCD, 1/2" Thick	A36/A572 GR.50
22	4	160-1.25-0007	Anchor Bolt, 1-1/4"Φ, 52" Long, Galvanized	F1554 GR.105 or AASHTO M164
23	24	153-H2H-6010	1-1/4"-7 Heavy Hex Nut	ASTM A194 Gr.2H Galvanized
24	8	154-FWN-6014	1-1/4" Flat Washer Narrow, Galvanized	ASTM F436

BY	REV	DATE	DESCRIPTION
DRK	1C	01-06-09	UPDATE DRAWINGS AS PER GB MARK UPS DATED 12-30-08
DRK	1B	12-20-08	UPDATE DRAWINGS AS PER GB MARK UPS DATED 12-17-08
DRK	1A	12-11-08	UPDATE DRAWINGS AS PER GB MARK UPS DATED 12-11-08

CAMERA POLES
STATE OF WASHINGTON
ASSEMBLY DETAILS

REVISION:	0A
SHEET SIZE:	B
APPROVED BY:	DAB
SCALE:	3/4"=1'-0"
DATE:	07-06-08
DRAWN:	DRK
SHEET:	2 of 2

American Pole Structures LLC.
Sedro Woolley, WA
PH:360-855-0737 FX:360-855-1692

WS-CP-01