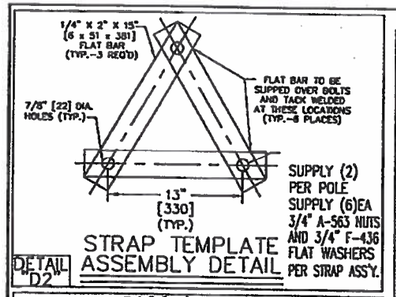

DETAIL "D2" STRAP TEMPLATE ASSEMBLY DETAIL

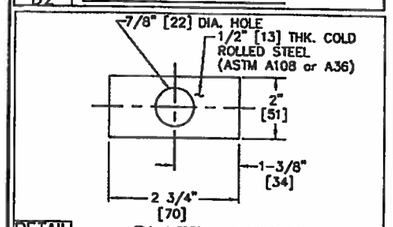

DETAIL "D" PLATE WASHER

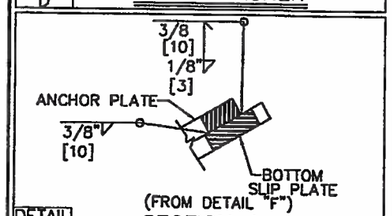

DETAIL "C" SECTION A-A

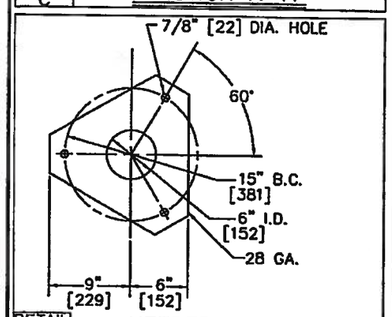

DETAIL "B" KEEPER PLATE

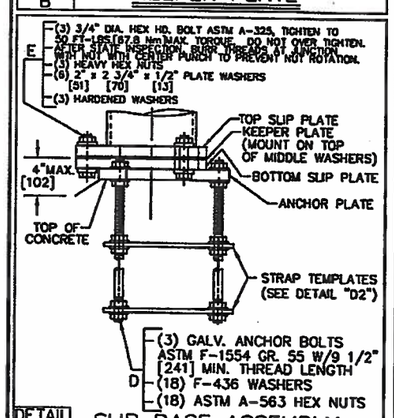

DETAIL "A" SLIP BASE ASSEMBLY

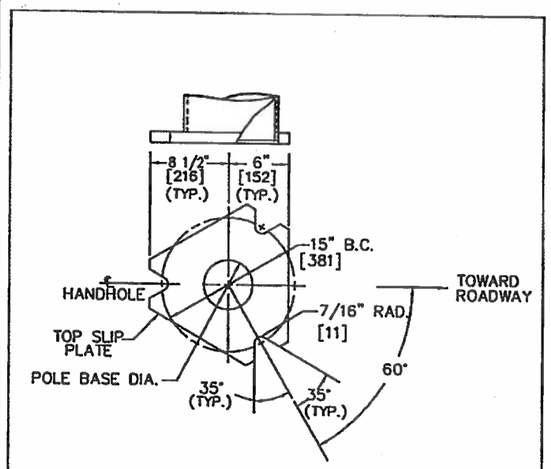

DETAIL "E" TOP SLIP PLATE

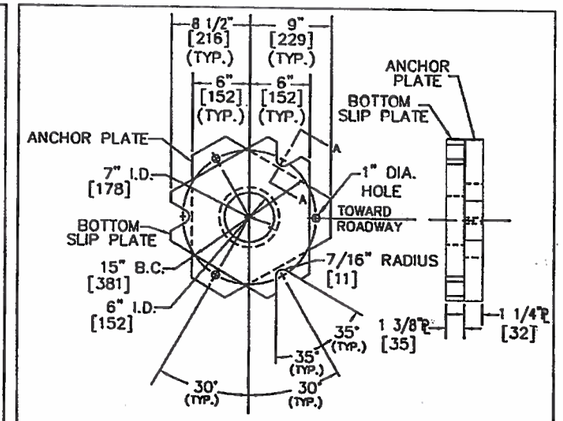

*BOTTOM SLIP PLATE AND ANCHOR PLATE TO BE ASTM A-572 GR. 50

DETAIL "F" *BOTTOM SLIP PLATE & ANCHOR PLATE

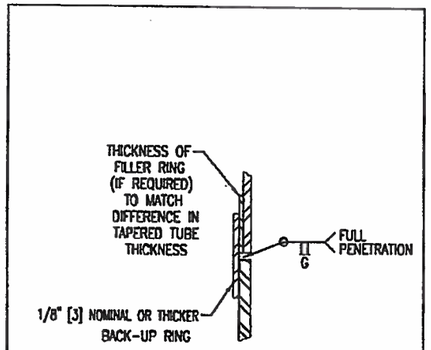

DETAIL "G" SPLICE DETAIL

WHEN REQUIRED BASED UPON MATERIAL AVAILABILITY

MATERIAL SPECIFICATION	
SHAFT	STEEL OF 48,000 P.S.I. [330,948 kPa] MINIMUM YIELD AFTER FABRICATION: ASTM A-36 ASTM A-572 ASTM A-595 GR. A ASTM A-709 ASTM A-1008 ASTM A-1011 THE ABOVE LISTED MATERIALS ARE USED BASED UPON AVAILABILITY AT TIME OF PURCHASE OF MATRERIAL LOTS FOR PRODUCING POLE AND ARM SHAFTS
BASE PLATE	ASTM A-36 STEEL
PIPE	ASTM A-53 GR. B OR ASTM A-500 GR. B
ANCHOR BOLTS	ASTM F-1554 GR. 55
CONNECTION BOLTS	ASTM A-325
POLE FINISH	HOT DIP GALVANIZED PER ASTM A-123(AASHTO M-111)
HARDWARE FINISH	HOT DIP GALVANIZED PER ASTM A-153(AASHTO M-232)
WELDS LONGITUDINAL	BUTT WELD BY THE ELECTRICAL RESISTANCE PROCESS
WELDS CIRCUMFERENTIAL	BUTT WELD WITH PERMANENT BACK-UP RING (CONTINOUS)

NOTES

1 WELD: ALL BUTT WELDS TO BE GROUND FLUSH WITH BASE METAL.

2 WELDING OF STRUCTURES SHALL BE IN ACCORDANCE WITH THE LATEST EDITION OF THE AWS D1.1 STRUCTURAL WELDING CODE – STEEL

③ TAPERED ROUND SHAFT, WITH 0.14 TAPER 4" O.D. AT SLIPFITTER WELD. [102]

④ ORDERING INFO.

SERIES

TYPE PS–8–SB–DWG. NO.

POLE HEIGHT

SB = SLIP BASE MOUNT POLE

⑤ DIMENSIONS INSIDE [ ] ARE METRIC. INCHES ARE CONVERTED TO MILLIMETERS, FEET TO METERS.

⑥ REFERENCE WASHINGTON D.O.T. STANDARD PLAN
J-21.10-02 SHEET 2 OF 2 FOUNDATION DETAILS
IS-1 PEDESTRIAN PUSH BUTTON POST
J-20.16-00 PEDESTRIAN SIGNAL STANDARD
J-21.15-00 TYPE 1 SIGNAL STANDARD
J-22.15-00 RAMP METER SIGNAL STANDARD
J-21.16-00 FLASHING BEACON TYPE 1 SIGNAL STANDARD

⑦ POLE SHAFT THICKNESS IS 11 GA. (.1196" [3 mm]).

⑧ AASHTO 2009 DESIGN PARAMETERS:
1.) LOCATION: WASHINGTON STATE
2.) BASIC WIND SPEED: 90 MPH.
3.) DESIGN LIFE: 50 YEARS
4.) FATIGUE CATEGORY : N/A

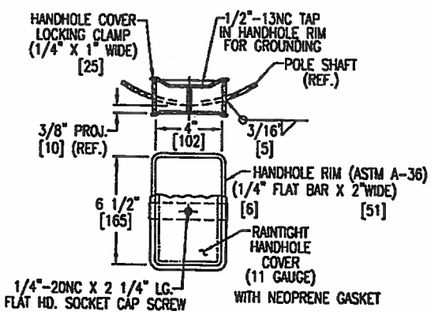

DETAIL "H" HANDHOLE DETAIL

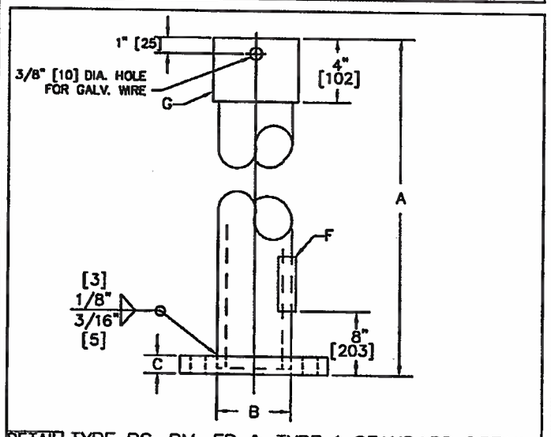

DETAIL "M" TYPE PS, RM, FB & TYPE 1 STANDARD DETAIL

ITEM	DESCRIPTION	TYPE PS-SB	TYPE 1, PS, RM	TYPE I-12-SB	TYPE FB-14-SB
A	HEIGHT	8'-0" [2.4]	10'-0" [3.0]	12'-0" [3.7]	14'-0" [4.3]
B	POLE BASE DIAMETER	5 1/4" [133] ③	5 1/4" [133] ③	5 1/4" [133] ③	5 13/16" [148] ③
C	PLATE THICKNESS	1/2" [13]	1/2" [13]	1/2" [13]	1/2" [13]
D	ANCHOR BOLT, NUT & LOCK WASHER	3/4" X 30" [19 X 762]	3/4" X 30" [19 X 762]	3/4" X 30" [19 X 762]	3/4" X 30" [19 X 762]
E	LEVELING NUT & FLAT WASHER	3/4" [19]	3/4" [19]	3/4" [19]	3/4" [19]
F	HANDHOLE SIZE	4" X 6 1/2" [102 X 165]	4" X 6 1/2" [102 X 165]	4" X 6 1/2" [102 X 165]	4" X 6 1/2" [102 X 165]
G	SLIPFITTER 4 1/2" O.D.	4" SCH.40	4" SCH.40	4" SCH.40	4" SCH.40
	POLE QTY.				

APPROVED
Manufacturer's Pole Plan
Approved For Listing As A
Pre-Approved Drawing
WSDOT Bridge & Structures Office
By GB Date 3-13-2012

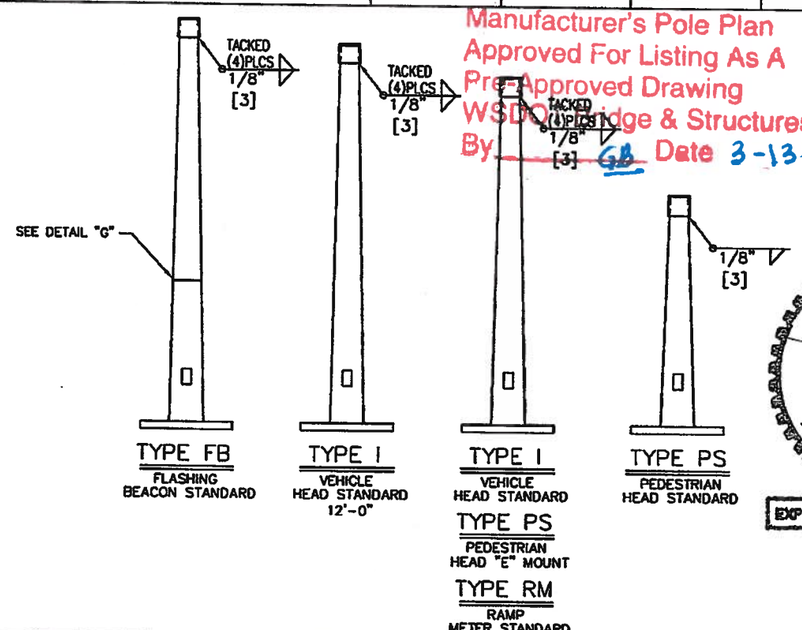

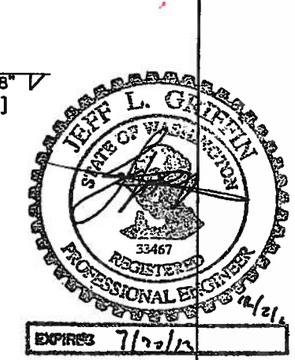

AGENCY	
PROJECT	
DISTRIBUTOR	
CONTRACTOR	
CUSTOMER ORDER NO.	
AMERON NO.	

REV	DATE	DESCRIPTION	BY	APPR

Ameron POLE PRODUCTS DIVISION

WA. STATE SIGNAL STANDARD
TYPE PS, 1, RM & FB DETAILS
SLIP BASE

DRAWN: BB	DATE: 11/10	SCALE N.T.S.	DWG.NO. WA10TR-2	REV. -
APPR: RD	DATE: 11/10			