ITEM	DESCRIPTION	TYPE PPB	TYPE PS	TYPE I, PS, RM	TYPE 1-12-FB	TYPE FB-14-FB
A	HEIGHT	5'-0" [1.5]	8'-0" ⑨ [2.4]	10'-0" [3.0]	12'-0" [3.7]	14'-0" [4.3]
B	POLE BASE DIAMETER	3 1/2" ⑦ [89]	5 1/4" ③ ⑦ [133]	5 1/4" ③ ⑦ [133]	5 1/4" ③ ⑦ [133]	5 13/16" ③ ⑦ [148]
C	PLATE THICKNESS	1/2" [13]	3/4" [19]	3/4" [19]	3/4" [19]	3/4" [19]
D	PLATE WIDTH	7" [178]	9" [229]	9" [229]	9" [229]	9" [229]
E	HOLE DIAMETER	5/8" [16]	1" [25]	1" [25]	1" [25]	1" [25]
F	BOLT CIRCLE	6" [152]	9" [229]	9" [229]	9" [229]	9" [229]
J	ANCHOR BOLT, HEAVY HEX NUT & FLAT WASHER	1/2" X 18" ALL THRD. [13 X 457] (SEE NOTE 11)	3/4" X 30" [19 X 762]	3/4" X 30" [19 X 762]	3/4" X 30" [19 X 762]	3/4" X 30" [19 X 762]
Q	HANDHOLE SIZE	———	4" X 6 1/2" [102 X 165]	4" X 6 1/2" [102 X 165]	4" X 6 1/2" [102 X 165]	4" X 6 1/2" [102 X 165]
R	SLIPFITTER 4 1/2" O.D.	———	4" SCH.40	4" SCH.40	4" SCH.40	4" SCH.40
S	CAP DIAMETER	3" [76]	———	———	———	———
T	GROUNDING ANGLE	1"X 1" X 3/16" X 1 1/2" LG. [25 X 25 X 5 X 38 LG.]				
U	GROUNDING DRILL & TAP	DRILL #20 & TAP 1/4"-20NC				
V	GROUNDING STUD	1/4"-20NC X 1 1/2" S.S ALL THRD. [7 X 38]				
W	GROUNDING NUTS & WASHERS	1/4"S.S [7]				

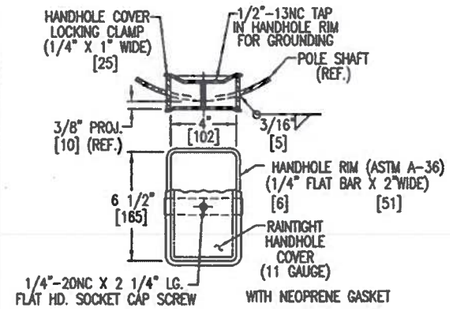

HANDHOLE DETAIL
(EXCEPT PPB)

TAG NOTES:

1.) TAG MOUNTED W/ (2) DRIVE SCREWS.
2.) MOUNT BOTTOM OF TAG 0'-6" ABOVE TOP OF HAND HOLE (ACCEPT PPB).
3.) MOUNT BOTTOM OF TAG 1'-8" FROM BASE OF PPB POLE.
4.) MANUFACTURER MONTH/YEAR = AMERON MM/YY
PART NO. = XXXXX-XX
DWG. NO. = WA10TR-1

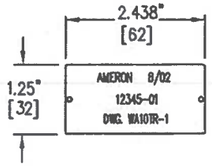

I.D. TAG DETAIL

MATERIAL SPECIFICATION	
SHAFT	STEEL OF 48,000 P.S.I. [330,948 kPa] MINIMUM YIELD AFTER FABRICATION: ASTM A-36 ASTM A-572 ASTM A-595 GR. A ASTM A-709 ASTM A-1008 ASTM A-1011 THE ABOVE LISTED MATERIALS ARE USED BASED UPON AVAILABILITY AT TIME OF PURCHASE OF MATRERIAL LOTS FOR PRODUCING POLE AND ARM SHAFTS
BASE PLATE	ASTM A-36 STEEL
PIPE	ASTM A-53 GRADE "B" OR ASTM A-500 GRADE "B"
ANCHOR BOLTS	ASTM F-1554 GR. 55
POLE FINISH	HOT DIP GALVANIZED PER ASTM A-123(AASHTO M-111)
HARDWARE FINISH	HOT DIP GALVANIZED PER ASTM F2329
WELDS LONGITUDINAL	BUTT WELD BY THE ELECTRICAL RESISTANCE PROCESS
WELDS CIRCUMFERENTIAL	BUTT WELD WITH PERMANENT BACK-UP RING (CONTINOUS)

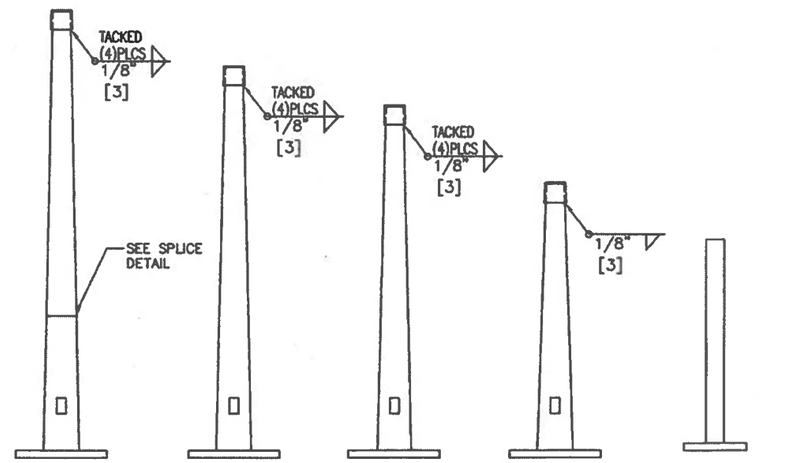

TYPE FB
FLASHING BEACON STANDARD

TYPE 1-12
VEHICLE HEAD STANDARD

TYPE I
VEHICLE HEAD STANDARD

TYPE PS
PEDESTRIAN HEAD TOP MOUNT

TYPE PPB
PEDESTRIAN PUSH BUTTON POST

TYPE PS
PEDESTRIAN HEAD "E" MOUNT

TYPE RM
RAMP METER STANDARD

NOTES:

① WELD: ALL BUTT WELDS TO BE GROUND FLUSH WITH BASE METAL.

② WELDING OF STRUCTURES SHALL BE IN ACCORDANCE WITH THE LATEST EDITION OF THE AWS D1.1 STRUCTURAL WELDING CODE - STEEL

③ TAPERED ROUND SHAFT, WITH 0.14 TAPER, WITH 4 1/2" O.D. SLIP FITTER. [114]

④ ORDERING INFO.

SERIES

TYPE PS-8-FB-DWG. NO.

POLE HEIGHT — FIXED BASE

⑤ DIMENSION IN [ ] ARE METRIC. INCHES ARE CONVERTED MILLIMETERS AND FEET ARE CONVERTED TO METERS.

⑥ REFERENCE WASHINGTON D.O.T. STANDARD PLAN
J-21.10-02 SHEET 1 OF 2 FOUNDATION DETAILS
IS-1 PEDESTRIAN PUSH BUTTON POST
J-20.11-01 PEDESTRIAN PUSH BUTTON W/CURB BASE
J-20.16-01 PEDESTRIAN SIGNAL STANDARD
J-21.15-01 TYPE 1 SIGNAL STANDARD
J-22.15-01 RAMP METER SIGNAL STANDARD
J-21.16-02 FLASHING BEACON TYPE 1 SIGNAL STANDARD

⑦ POLE SHAFT THICKNESS FOR TYPE 1'S ,PS & FB POLE IS 11 GA. .1196" [3 mm]. TYPE PPB IS 3" SCH. 40 PIPE.

⑧ AASHTO 2009 DESIGN PARAMETERS:
1.) LOCATION: WASHINGTON STATE
2.) BASIC WIND SPEED: 90 MPH.
3.) DESIGN LIFE: 50 YEARS
4.) FATIGUE CATEGORY : N/A

⑨ FOR P.S. POLES WITH "E" MOUNTING PEDESTRIAN SIGNALS, POLE WILL BE 10' TALL WITH THE SAME CHARTED DIMENSIONS AS THE TYPE 1 POLE.

⑩ SS STUD, NUTS & WASHERS ARE FIELD INSTALLED.

⑪ FOR CURB BASE MOUNT APPLICATION ANCHOR BOLT SIZE SHALL BE 1/2" X 24" ALL THREAD.

STANDARD TOP DETAIL
(EXCEPT PPB)

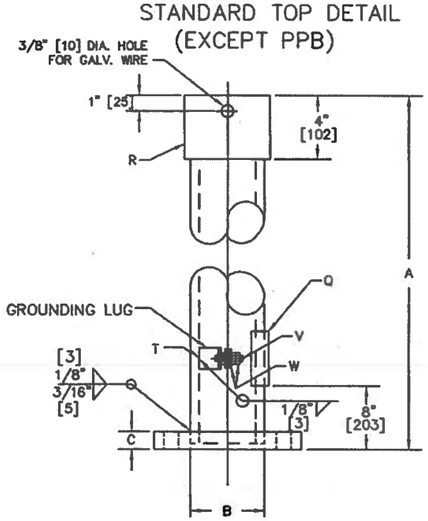

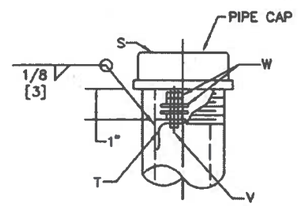

TYPE PPB GROUNDING LUG DETAIL

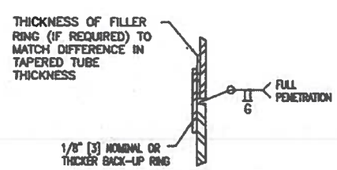

SPLICE DETAIL
WHEN REQUIRED BASED UPON MATERIAL AVAILABILITY

APPROVED
Manufacturer's Pole Plan
Approved For Listing As A
Pre-Approved Drawing
WSDOT Bridge & Structures Office
By GB Date 1-21-2014

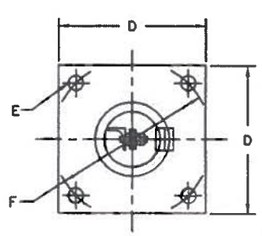

POLE & POST DETAIL

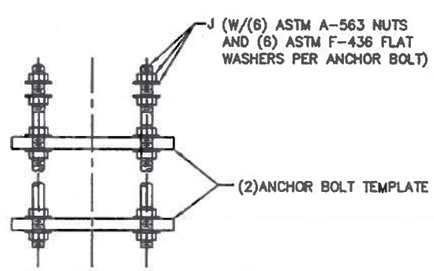

ANCHOR BOLT DETAIL
(4-BOLTS PER ASS'Y)

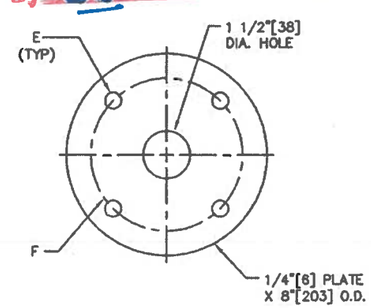

ANCHOR BOLT TEMPLATE DETAIL
FOR PPB POST

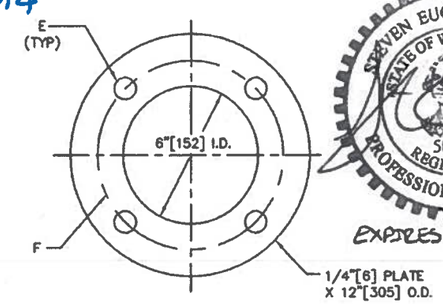

ANCHOR BOLT TEMPLATE DETAIL
FOR PS, 1, RM & FB POLES

STEVEN EUGENE TAYLOR
STATE OF WASHINGTON
50244
REGISTERED
PROFESSIONAL ENGINEER
1/16/2014
EXPIRES: 9/14/2014

REV	DATE	DESCRIPTION	BY	APPR
F	1/14	REV NOTE 3 TO 4 1/2" OD SLIP FITTER	MHM	GM
E	1/14	REV ANCHOR BOLT TEMPLATE BOLT CIRCLE	MHM	GM
D	10/13	REV. PPB A.B PER WSDOT PLAN & ADD CURB MOUNT	MHM	JJ
C	8/13	REV. & ADD I.D. TAG, HARDWARE FINISH	DH	MM
B	8/13	REV'D. PER WSDOT STD. PLANS	DH	MM
A	4/12	ADD I.D. DIMENSION TO A.B. TEMPLATE	BB	GM

Ameron POLE PRODUCTS DIVISION

WA. STATE SIGNAL STANDARD
TYPE PPB, PS, 1, RM & FB DETAILS
FIXED BASE

THIS DOCUMENT CONTAINS INFORMATION WHICH IS PROPRIETARY TO AMERON, IT SHALL NOT BE REPRODUCED, USED OR DISCLOSED TO ANYONE WITHOUT THE PRIOR WRITTEN PERMISSION OF AMERON.

DRAWN: BB	DATE: 11/10	SCALE	DWG.NO.	REV.
APPR: RD	DATE: 11/10	N.T.S.	WA10TR-1	F