ITEM	DESCRIPTION	TYPE PPB	TYPE PS	TYPE I, PS, RM	TYPE 1-12	TYPE FB
A	HEIGHT	4'-6" [1.4]	8'-0" [2.4] ⑨	10'-0" [3.0]	12'-0" [3.7]	14'-0" [4.3]
B	POLE BASE DIAMETER	2 1/2" [64]	5 1/4" ③ ⑦ [133]	5 1/4" ③ ⑦ [133]	5 1/4" ③ ⑦ [133]	5 13/16" ③ ⑦ [148]
C	PLATE THICKNESS	1/2" [13]	1/2" [13]	1/2" [13]	1/2" [13]	1/2" [13]
D	PLATE WIDTH	5" [127]	9" [229]	9" [229]	9" [229]	9" [229]
E	HOLE DIAMETER	5/8" [16]	1" [25]	1" [25]	1" [25]	1" [25]
F	BOLT CIRCLE	4 1/2" [114]	9" [229]	9" [229]	9" [229]	9" [229]
J	ANCHOR BOLT, NUT & FLAT WASHER	1/2" X 12" ALL THRD. [13 X 305]	3/4" X 30" [19 X 762 X]	3/4" X 30" [19 X 762 X]	3/4" X 30" [19 X 762 X]	3/4" X 30" [19 X 762 X]
K	LEVELING NUT & FLAT WASHER	1/2" [13] (LESS WASHER)	3/4" [19]	3/4" [19]	3/4" [19]	3/4" [19]
Q	HANDHOLE SIZE	———	4" X 6 1/2" [102 X 165]	4" X 6 1/2" [102 X 165]	4" X 6 1/2" [102 X 165]	4" X 6 1/2" [102 X 165]
R	SLIPFITTER 4 1/2" O.D.	———	4" SCH.40	4" SCH.40	4" SCH.40	4" SCH.40
S	CAP DIAMETER	2 1/2" [64]	———	———	———	———
	POLE QTY.					

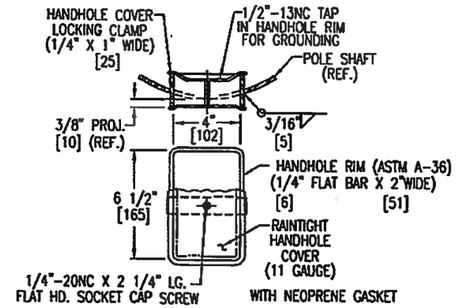

HANDHOLE DETAIL
(EXCEPT PPB)

MATERIAL SPECIFICATION	
SHAFT	STEEL OF 48,000 P.S.I. [330,948 kPa] MINIMUM YIELD AFTER FABRICATION: ASTM A-36, ASTM A-572, ASTM A-595 GR. A, ASTM A-709, ASTM A-1008, ASTM A-1011. THE ABOVE LISTED MATERIALS ARE USED BASED UPON AVAILABILITY AT TIME OF PURCHASE OF MATRERIAL LOTS FOR PRODUCING POLE AND ARM SHAFTS
BASE PLATE	ASTM A-36 STEEL
PIPE	ASTM A-53 GRADE "B" OR ASTM A-500 GRADE "B"
ANCHOR BOLTS	ASTM F-1554 GR. 55
POLE FINISH	HOT DIP GALVANIZED PER ASTM A-123(AASHTO M-111)
HARDWARE FINISH	HOT DIP GALVANIZED PER ASTM A-153(AASHTO M-232)
WELDS LONGITUDINAL	BUTT WELD BY THE ELECTRICAL RESISTANCE PROCESS
WELDS CIRCUMFERENTIAL	BUTT WELD WITH PERMANENT BACK-UP RING (CONTINOUS)

TYPE PPB DETAIL

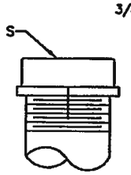

STANDARD TOP DETAIL
EXCEPT PPB

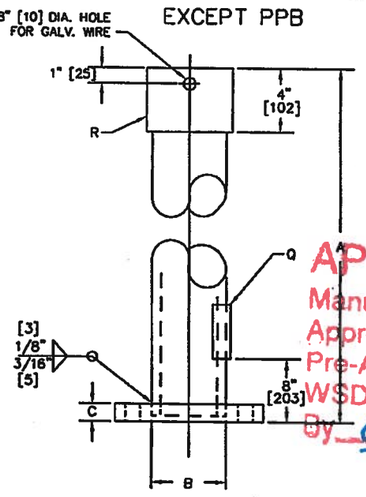

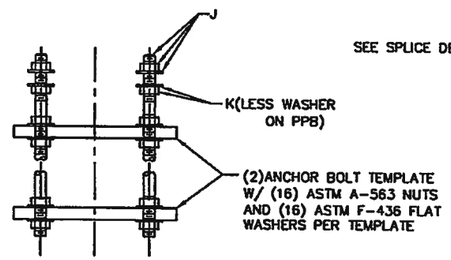

ANCHOR BOLT DETAIL
(4-BOLTS PER POLE)

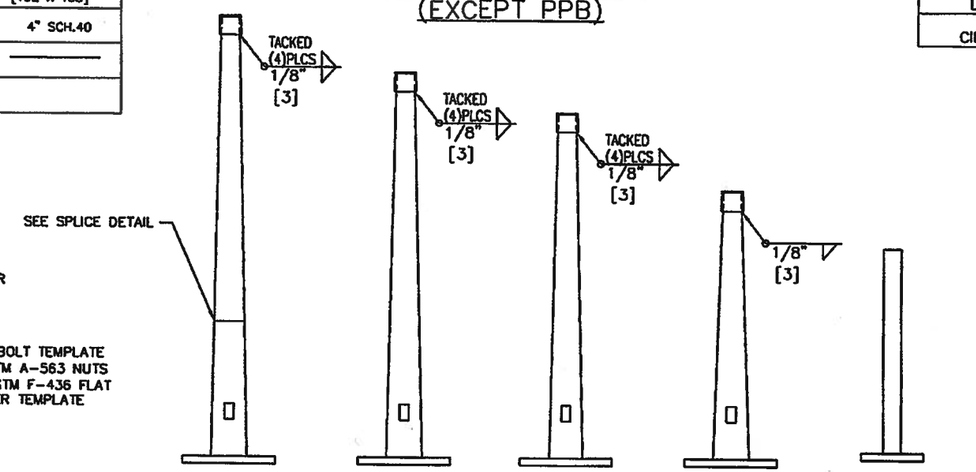

NOTES

① WELD: ALL BUTT WELDS TO BE GROUND FLUSH WITH BASE METAL.

② WELDING OF STRUCTURES SHALL BE IN ACCORDANCE WITH THE LATEST EDITION OF THE AWS D1.1 STRUCTURAL WELDING CODE - STEEL

③ TAPERED ROUND SHAFT, WITH 0.14 TAPER 4" O.D. AT SLIP FITTER WELD. [102]

④ ORDERING INFO.

SERIES — FIXED BASE

TYPE PS-FB-DWG. NO.

⑤ DIMENSION IN [ ] ARE METRIC. INCHES ARE CONVERTED MILLIMETERS AND FEET ARE CONVERTED TO METERS.

⑥ REFERENCE WASHINGTON D.O.T. STANDARD PLAN
J-21.10-02 SHEET 1 OF 2 FOUNDATION DETAILS
IS-1 PEDESTRIAN PUSH BUTTON POST
J-20.16-00 PEDESTRIAN SIGNAL STANDARD
J-21.15-00 TYPE 1 SIGNAL STANDARD
J-22.15-00 RAMP METER SIGNAL STANDARD
J-21.16-00 FLASHING BEACON TYPE 1 SIGNAL STANDARD

⑦ POLE SHAFT THICKNESS FOR TYPE 1'S ,PS & FB POLE IS 11 GA. .1196" [3 mm].

⑧ AASHTO 2009 DESIGN PARAMETERS:
1.) LOCATION: WASHINGTON STATE
2.) BASIC WIND SPEED: 90 MPH.
3.) DESIGN LIFE: 50 YEARS
4.) FATIGUE CATEGORY : N/A

⑨ FOR P.S. POLES WITH "E" MOUNTING PEDESTRIAN SIGNALS, POLE WILL BE 10' TALL WITH THE SAME CHARTED DIMENSIONS AS THE TYPE 1 POLE.

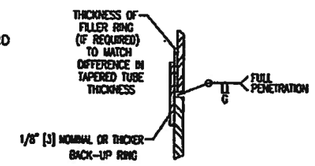

SPLICE DETAIL
WHEN REQUIRED BASED UPON MATERIAL AVAILABILITY

APPROVED
Manufacturer's Pole Plan
Approved For Listing As A
Pre-Approved Drawing
WSDOT Bridge & Structures Office
By GB Date 3-13-2012

JEFF L. GRIFFIN
STATE OF WASHINGTON
33467
REGISTERED PROFESSIONAL ENGINEER
12/21/
EXPIRES 7/21/13

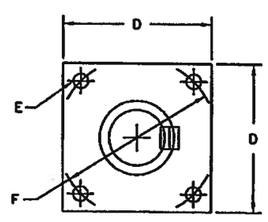

POLE & POST DETAIL

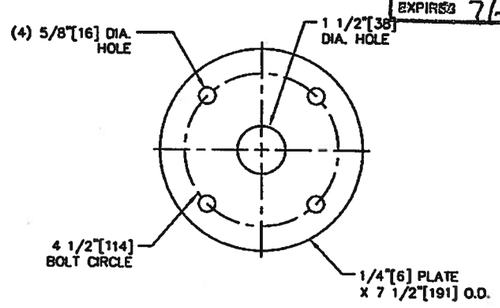

ANCHOR BOLT TEMPLATE DETAIL
FOR PPB POST

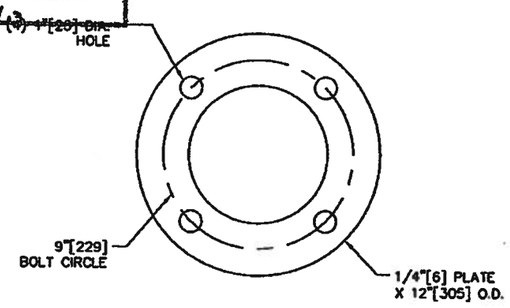

ANCHOR BOLT TEMPLATE DETAIL
FOR PS, 1, RM & FB POLES

MATERIAL LIST	
QTY.	DESCRIPTION

REV	DATE	DESCRIPTION	BY	APPR

AGENCY	
PROJECT	
DISTRIBUTOR	
CONTRACTOR	
CUSTOMER ORDER NO.	
AMERON NO.	

Ameron POLE PRODUCTS DIVISION

WA. STATE SIGNAL STANDARD
TYPE PPB, PS, 1, RM & FB DETAILS
FIXED BASE

THIS DOCUMENT CONTAINS INFORMATION WHICH IS PROPRIETARY TO AMERON, IT SHALL NOT BE REPRODUCED, USED OR DISCLOSED TO ANYONE WITHOUT THE PRIOR WRITTEN PERMISSION OF AMERON.

DRAWN: BB	DATE: 11/10	SCALE	DWG.NO.	REV.
APPR: RD	DATE: 11/10	N.T.S.	WA10TR-1	-