-POLE DATA-

POLE NO.	POLE QTY.	POLE DESCRIPTION	SHAFT LENGTH "A"	SHAFT DIMENSIONS TOP O.D. X BASE O.D.	MATERIAL BREAKDOWN .120" THK.	.179" THK.	.239" THK.	.3125" THK.	BASE SQ. "F"	BASE BOLT CIRCLE "B.C."	BASE THK. "T"	ANCHOR BOLT or ROD DIMENSIONS
		CCTV20–LC1	20'–0" [6.1]	9 3/8" X 12 1/8" [238 X 308]	–	20'–0" [6.1]	–	–	25" [635]	25 1/2" [648]	1 1/4" [32]	1 1/4"ø X 60" [32 X 1524]
		CCTV25–LC1	25'–0" [7.6]	9 3/8" X 12 13/16" [238 X 325]	–	25'–0" [7.6]	–	–	25" [635]	25 1/2" [648]	1 1/4" [32]	1 1/4"ø X 60" [32 X 1524]
		CCTV30–LC1	30'–0" [9.1]	9 3/8" X 13 1/2" [238 X 343]	–	30'–0" [9.1]	–	–	25" [635]	25 1/2" [648]	1 1/4" [32]	1 1/4"ø X 60" [32 X 1524]
		CCTV35–LC1	35'–0" [10.7]	9 3/8" X 14 3/16" [238 X 360]	–	35'–0" [10.7]	–	–	25" [635]	25 1/2" [648]	1 1/4" [32]	1 1/4"ø X 60" [32 X 1524]
		CCTV40–LC1	40'–0" [12.2]	9 3/8" X 14 7/8" [238 X 378]	–	–	40'–0" [12.2]	–	25" [635]	25 1/2" [648]	1 1/4" [32]	1 1/4"ø X 60" [32 X 1524]
		CCTV45–LC1	45'–0" [13.7]	11 7/16" X 17 5/8" [290 X 448]	–	–	–	45'–0" [13.7]	25" [635]	25 1/2" [648]	1 1/4" [32]	1 1/4"ø X 60" [32 X 1524]
		CCTV50–LC1	50'–0" [15.2]	12 1/8" X 19" [308 X 483]	–	–	–	50'–0" [15.2]	25" [635]	25 1/2" [648]	1 1/4" [32]	1 1/4"ø X 60" [32 X 1524]

-POLE DATA-

POLE NO.	POLE QTY.	POLE DESCRIPTION	SHAFT LENGTH "A"	SHAFT DIMENSIONS TOP O.D. X BASE O.D.	MATERIAL BREAKDOWN .120" THK.	.179" THK.	.239" THK.	.3125" THK.	BASE SQ. "F"	BASE BOLT CIRCLE "B.C."	BASE THK. "T"	ANCHOR BOLT or ROD DIMENSIONS
		CCTV20–LC2	20'–0" [6.1]	9 3/8" X 12 1/8" [238 X 308]	–	20'–0" [6.1]	–	–	25" [635]	25 1/2" [648]	1 1/4" [32]	1 1/4"ø X 60" [32 X 1524]
		CCTV25–LC2	25'–0" [7.6]	9 3/8" X 12 13/16" [238 X 325]	–	25'–0" [7.6]	–	–	25" [635]	25 1/2" [648]	1 1/4" [32]	1 1/4"ø X 60" [32 X 1524]
		CCTV30–LC2	30'–0" [9.1]	9 3/8" X 13 1/2" [238 X 343]	–	30'–0" [9.1]	–	–	25" [635]	25 1/2" [648]	1 1/4" [32]	1 1/4"ø X 60" [32 X 1524]
		CCTV35–LC2	35'–0" [10.7]	9 3/8" X 14 3/16" [238 X 360]	–	35'–0" [10.7]	–	–	25" [635]	25 1/2" [648]	1 1/4" [32]	1 1/4"ø X 60" [32 X 1524]
		CCTV40–LC2	40'–0" [12.2]	9 3/8" X 14 7/8" [238 X 378]	–	–	–	40'–0" [12.2]	25" [635]	25 1/2" [648]	1 1/4" [32]	1 1/4"ø X 60" [32 X 1524]
		CCTV45–LC2	45'–0" [13.7]	11 7/16" X 17 5/8" [290 X 448]	–	–	–	45'–0" [13.7]	25" [635]	25 1/2" [648]	1 1/4" [32]	1 1/4"ø X 60" [32 X 1524]
		CCTV50–LC2	50'–0" [15.2]	12 1/8" X 19" [308 X 483]	–	–	–	50'–0" [15.2]	25" [635]	25 1/2" [648]	1 1/4" [32]	1 1/4"ø X 60" [32 X 1524]

NOTES:

1.) WELDING OF STRUCTURES SHALL BE IN ACCORDANCE WITH THE LATEST EDITION OF THE AWS STRUCTURAL WELDING CODE D1.1 – STEEL LONGITUDINAL SEAM WELD IS 60% MIN. PENETRATION, EXCEPT FOR 6" FROM END OF SECTION AT FLANGE, BASEPLATE AND SLIP JOINT ARE 100% PENETRATION.

2.) POLE SHAFT IS ROUND WITH 0.1375 TAPER

3.) LOAD CASE 1:
   1.) EFFECTIVE PROJECTED AREA OF CAMERA = 4 SQ. FT AT 2 FT. ABOVE TOP OF POLE (85 LBS)
   2.) 12" DIAMETER DISH AT POLE HEIGHT W/ E.P.A. OF 1.3 SQ. FT. (78 LBS)

   LOAD CASE 2:
   1.) EFFECTIVE PROJECTED AREA OF CAMERA = 4 SQ. FT AT 2 FT. ABOVE TOP OF POLE (85 LBS)
   2.) SIDE CAMERA =0.54 SQ.FT. AT 1 FT. FROM TOP OF POLE (10 LBS)
   3.) SIDE CAMERA =0.54 SQ.FT. AT 2 FT. FROM TOP OF POLE (10 LBS)
   4.) (2) NEMA CABINETS INSTALLED BACK TO BACK =1.33 SQ.FT. AT 3 FT.–8 IN. FROM TOP OF POLE (45 LBS EA.)
   5.) RADIO EQUIP. =2.25 SQ.FT. AT 2 FT. FROM TOP OF POLE (10 LBS)
   6.) RADIO EQUIP. =2.25 SQ.FT. AT 9 FT. FROM TOP OF POLE (10 LBS)

4.) AASHTO 2009 DESIGN PARAMETERS:
   1.) LOCATION: WASHINGTON STATE
   2.) BASIC WIND SPEED: 90 MPH.
   3.) DESIGN LIFE: 50 YEARS RECURRENCE INTERVAL
   4.) FATIGUE CATEGORY : N/A TO POLE HEIGHTS LESS THAN 55 FT.

5.) DEFLECTION CRITERIA:
   MAXIMUM ALLOWABLE DEFLECTION:
   30 MPH WIND: 0.7"
   35 MPH WIND: 0.8"
   70 MPH WIND: 1.4"
   LOAD CASE 1 CAMERA POLES GROUND MOUNT OR UP TO 30 FT. ELEVATED BRIDGE MOUNT MEET DEFLECTION DESIGN CRITERIA.

APPROVED
Manufacturer's Pole Plan
Approved For Listing As A
Pre-Approved Drawing
WSDOT Bridge & Structures Office
By GB Date 6-10-2015

STEVEN EUGENE TAYLOR
STATE OF WASHINGTON
50244
REGISTERED
PROFESSIONAL ENGINEER
6/4/2015

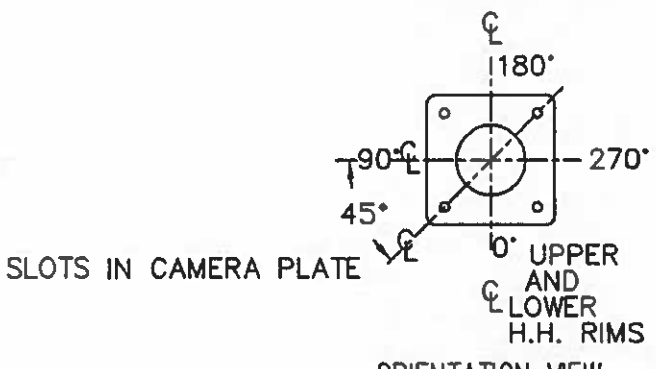

ORIENTATION VIEW

LOAD CASE 1

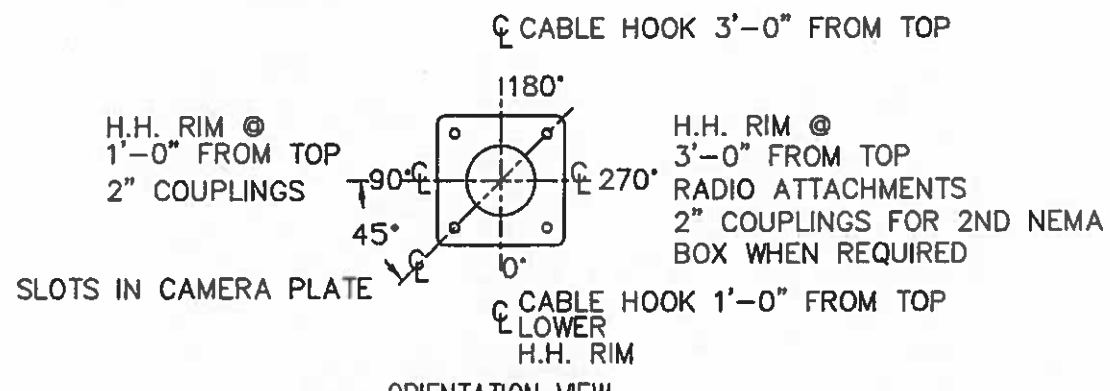

ORIENTATION VIEW

LOAD CASE 2

REV	DATE	DESCRIPTION	BY	APPR
C	6/15	REV DEFLECTION NOTE PER WSDOT COMMENT	ST	GM
B	5/15	REV SIZING FOR 30FT BRIDGE MOUNT	ST	GM
A	1/12	REV ORIENTATION	MHM	GM

Ameron POLE PRODUCTS DIVISION

WASHINGTON STATE
CCTV POLES

THIS DOCUMENT CONTAINS INFORMATION WHICH IS PROPRIETARY TO AMERON. IT SHALL NOT BE REPRODUCED, USED OR DISCLOSED TO ANYONE WITHOUT THE PRIOR WRITTEN PERMISSION OF AMERON.

DRAWN : MHM	DATE : 12/11	SCALE	DWG. NO. W6CCTV2	REV. C
APPR : GM	DATE : 12/11			