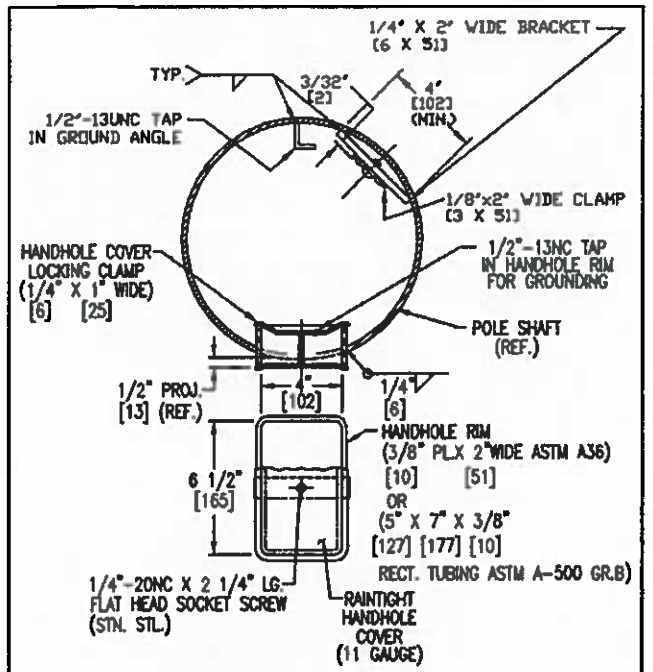

HANDHOLE DETAIL

DETAIL C

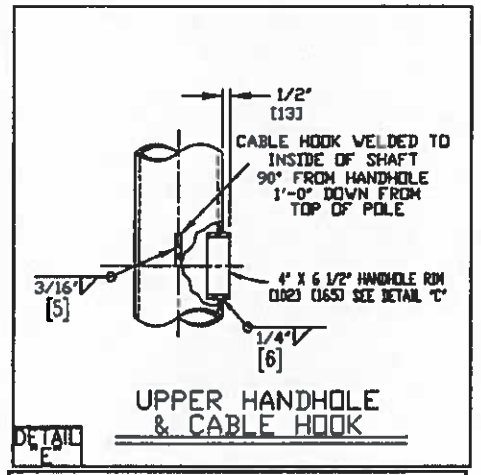

UPPER HANDHOLE & CABLE HOOK

DETAIL E

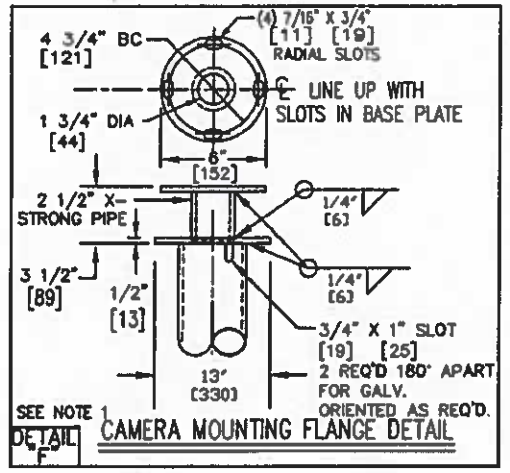

CAMERA MOUNTING FLANGE DETAIL

DETAIL F

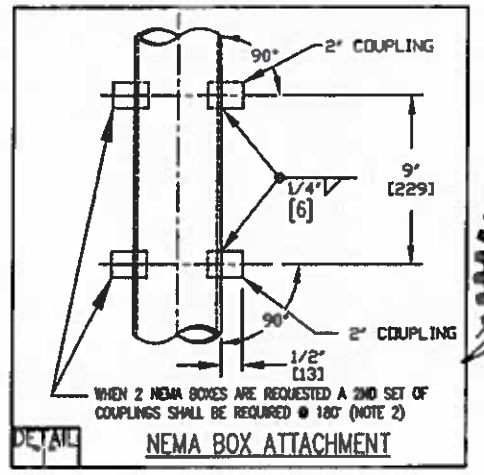

NEMA BOX ATTACHMENT

DETAIL

STEVEN EUGENE TAYLOR
STATE OF WASHINGTON
40204
REGISTERED
PROFESSIONAL ENGINEER
6/9/2015

--GENERAL NOTES--

MATERIAL SPECIFICATIONS	
SHAFT	STEEL OF 50,000 P.S.I. MINIMUM YIELD AFTER FABRICATION ASTM A-572 GR.50 ASTM A-595 GR. A ASTM A-709 GR.50 ASTM A-1008 GR.50 ASTM A-1011 GR.50, A-1018 GR.50 THE ABOVE LISTED MATERIALS ARE USED BASED UPON AVAILABILITY AT TIME OF PURCHASE OF MATERIAL LOTS FOR PRODUCING POLE AND ARM SHAFTS
BASE PLATE AND FLANGES	ASTM A-36 STEEL
PIPE	ASTM A-53 GRADE "B" OR ASTM A-500 GRADE "B"
ANCHOR BOLTS	ASTM F-1554 GR. 105

MANUFACTURING PROCESSES	
BUTT WELDS	GROUND FLUSH WITH BASE METAL
LONGITUDINAL WELDS	BUTT WELDED BY THE ELECTRICAL RESISTANCE PROCESS SEE NOTE 1
CIRCUMFERENTIAL WELDS	BUTT WELDED WITH PERMANENT CONTINUOUS BACKUP RING

FINISH COATING	
STRUCTURE	HOT DIP GALVANIZED PER ASTM A-123 (AASHTO M-111)
HARDWARE	HOT DIP GALVANIZED PER ASTM A-153 (AASHTO M-232)

DESIGN CRITERIA	
STRUCTURE AND HARDWARE	IN ACCORDANCE WITH THE "SPECIFICATIONS FOR STRUCTURAL SUPPORTS OF HIGHWAY SIGNS, LUMINAIRES AND TRAFFIC SIGNALS." AASHTO 2009
WELDING	IN ACCORDANCE WITH LATEST EDITION OF AWS D1.1 WELDING CODE

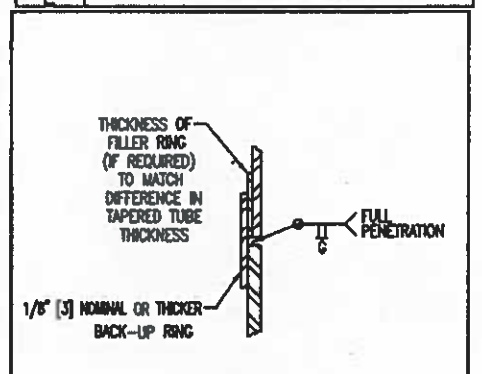

SPLICE DETAIL

WHEN REQUIRED BASED UPON MATERIAL AVAILABILITY

DETAIL D

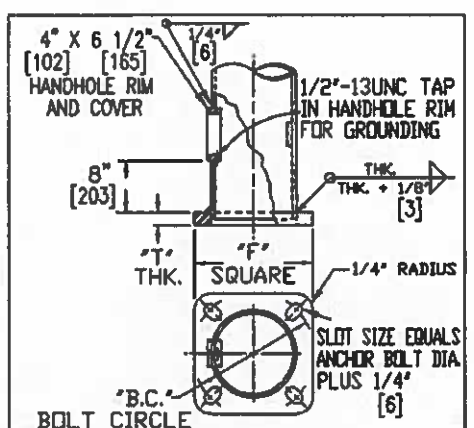

BASEPLATE DETAIL

DETAIL B

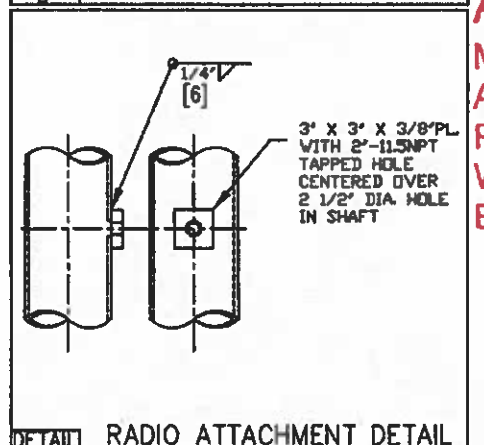

RADIO ATTACHMENT DETAIL

DETAIL H

APPROVED
Manufacturer's Pole Plan
Approved For Listing As A
Pre-Approved Drawing
WSDOT Bridge & Structures Office
By GB Date 6-10-2015

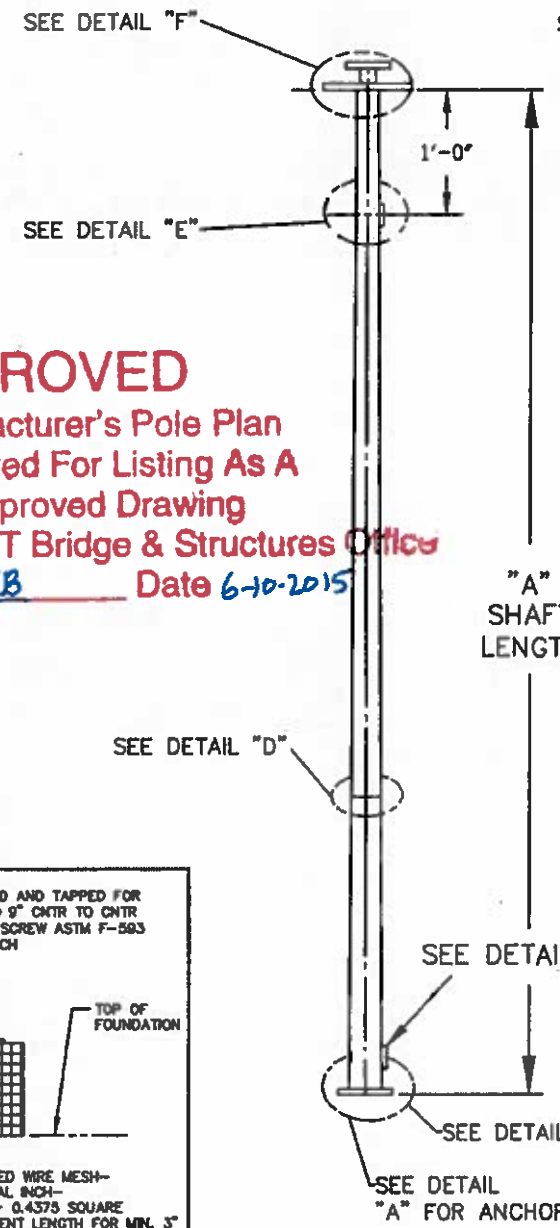

LOAD CASE 1

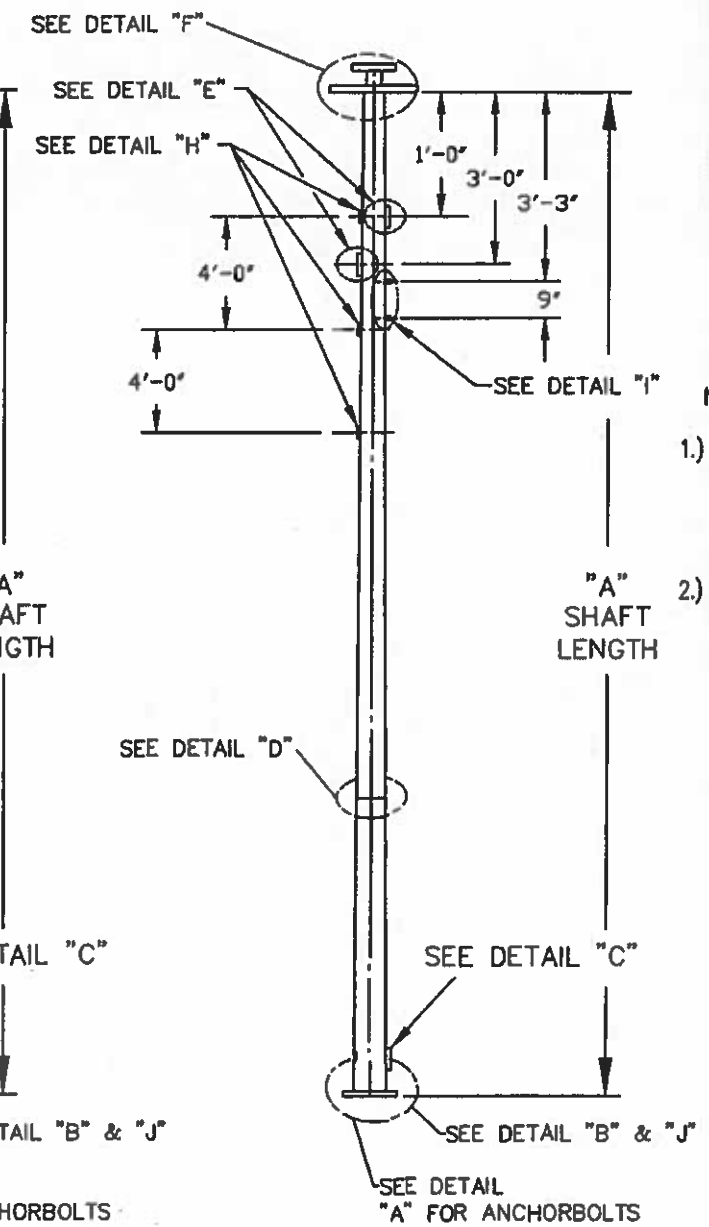

LOAD CASE 2

NOTES:

1.) PLEASE VERIFY POLE TOP CAMERA PLATE, DETAIL "F" TO ASSURE THE DEMENSIONS OF THE PLATE, BOLT CIRCLE AND BOLTS SLOTS ARE ADEQUATE FOR THE REQUIRED CAMERA PIROR TO RELEASING THE PROJECT FOR MANUFACTURING.

2.) QUANTITY OF NEMA BOXES REQUIRED SHALL BE SPECIFIED AT TIME OF ORDER.

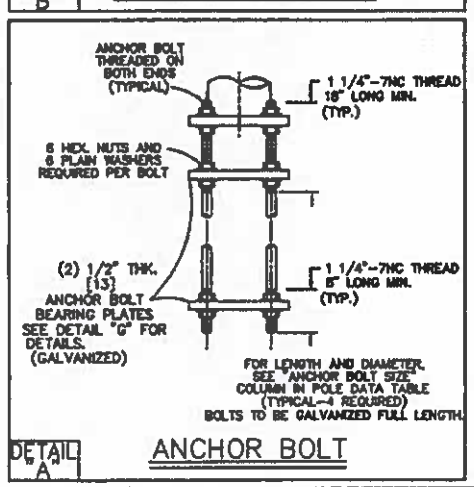

ANCHOR BOLT

DETAIL A

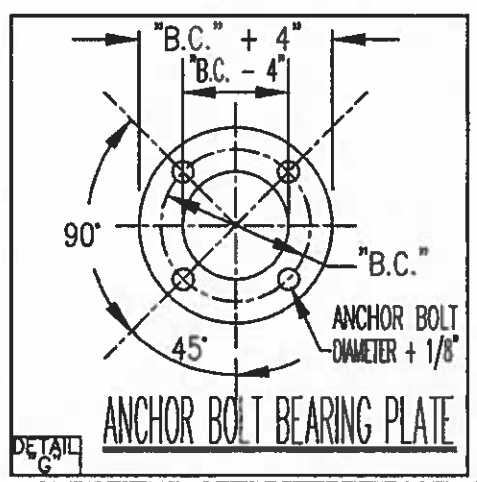

ANCHOR BOLT BEARING PLATE

DETAIL G

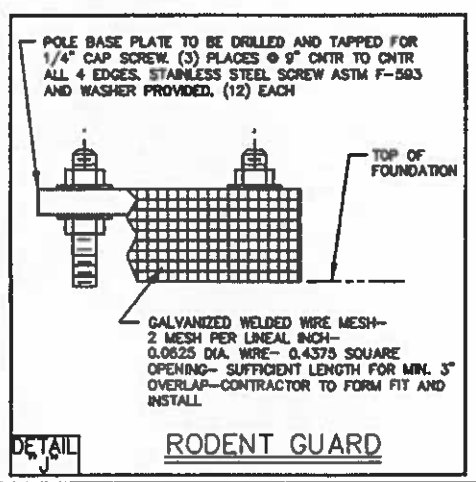

RODENT GUARD

DETAIL J

AGENCY:	WSDOT
PROJECT:	
DISTRIBUTOR:	
CONTRACTOR:	
CUSTOMER ORDER NO.:	
AMERON NO.:	

REV	DATE	DESCRIPTION	BY	APPR
G	6/15	DETAIL "B", "C" AND "F"	MHM	GM
F	1/12	ADD 2 MORE CPLGS FOR NEMA BOX	MHM	GM
E	12/11	ADD LOAD CASE 2 POLE	MHM	GM

Ameron POLE PRODUCTS DIVISION

WASHINGTON STATE
CCTV POLES

THIS DRAWING CONTAINS INFORMATION WHICH IS PROPRIETARY TO AMERON, IN, SHALL NOT BE REPRODUCED, USED OR DISCLOSED TO ANYONE WITHOUT THE PRIOR WRITTEN PERMISSION OF AMERON.

DRAWN : BB	DATE : 5/06	SCALE	DWG. NO. W6CCTV1	REV. G
APPR : JB	DATE : 5/06			