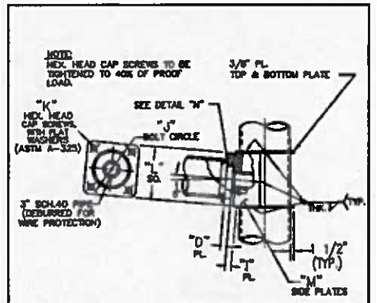

MAST ARM CONNECTION DETAIL

DETAIL "D" (TYPE II SERIES POLE)

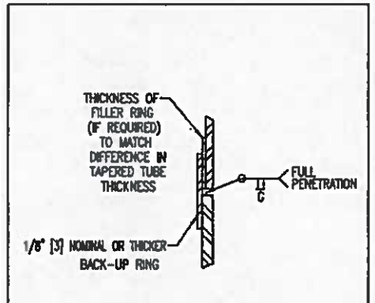

SPLICE DETAIL

DETAIL "E" WHEN REQUIRED BASED UPON MATERIAL AVAILABILITY

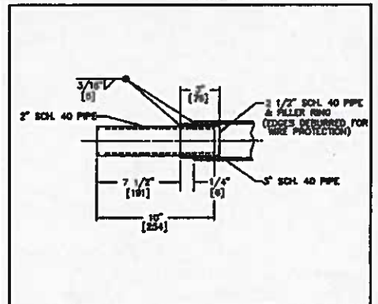

END OF ARM TENON DETAIL

DETAIL "F" (TYPE "J" & "T")

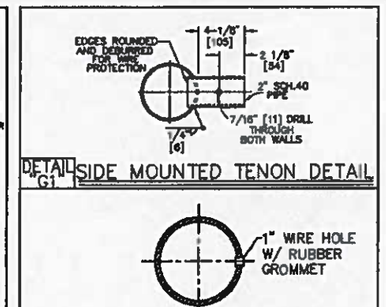

DETAIL "G1" SIDE MOUNTED TENON DETAIL

DETAIL "G2" SIGNAL ATTACHMENT DETAIL (USED WHEN TYPE "N" MOUNT IS SPECIFIED)

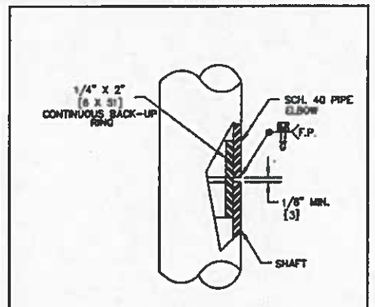

ELBOW CONNECTION

DETAIL "H"

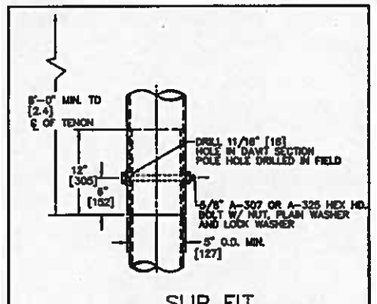

SLIP FIT CONNECTION DETAIL

DETAIL "C" (FOR MOUNTING HEIGHTS GREATER OR EQUAL TO 30'-0")

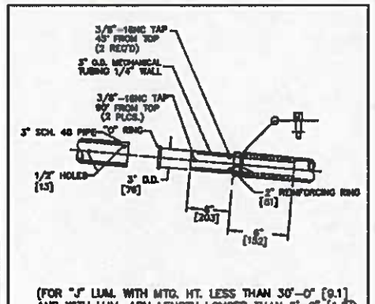

(FOR "J" LUM. WITH MTG. HT. LESS THAN 30'-0" [9.1] AND WITH LUM. ARM LENGTH LONGER THAN 6'-0" [1.8])

LUMINAIRE EXTENSION

DETAIL "J" (TYPE "J")

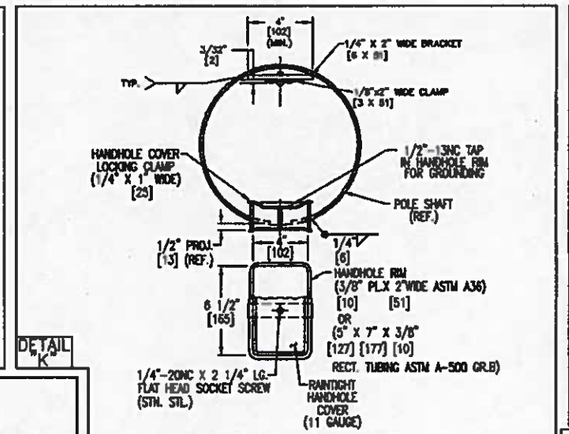

HANDHOLE DETAIL

DETAIL "K"

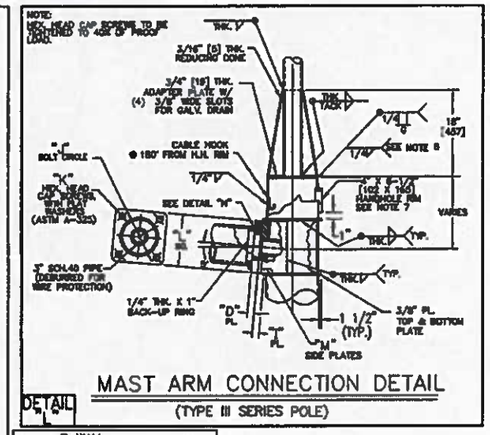

MAST ARM CONNECTION DETAIL

DETAIL "L" (TYPE III SERIES POLE)

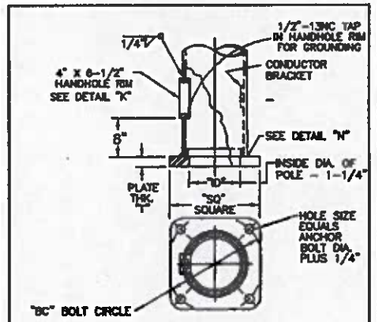

BASE DETAIL

DETAIL "B"

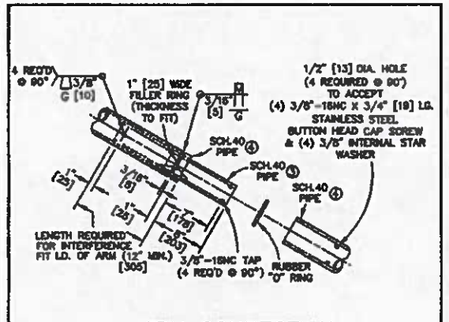

ARM CONNECTION

DETAIL "I" (TYPE "T")

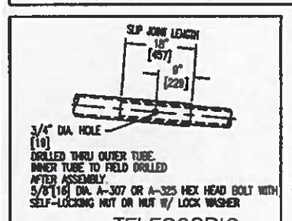

TELESCOPIC SPLICE DETAIL

DETAIL "M"

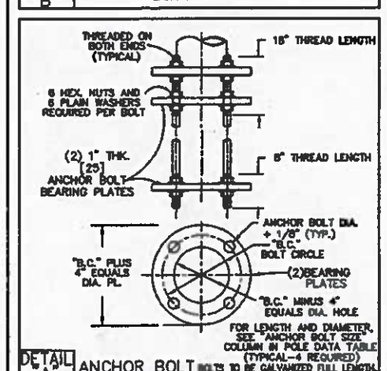

ANCHOR BOLT

DETAIL "A"

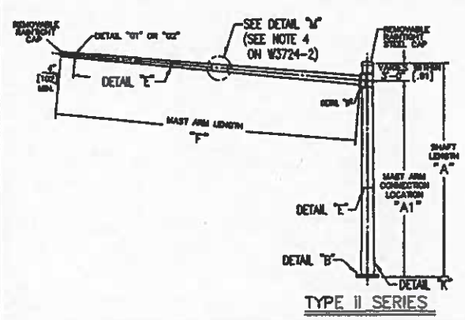

TYPE II SERIES

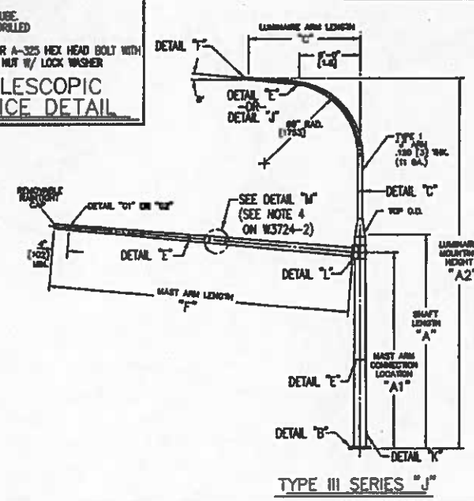

TYPE III SERIES "J"

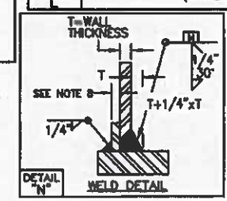

WELD DETAIL

DETAIL "N"

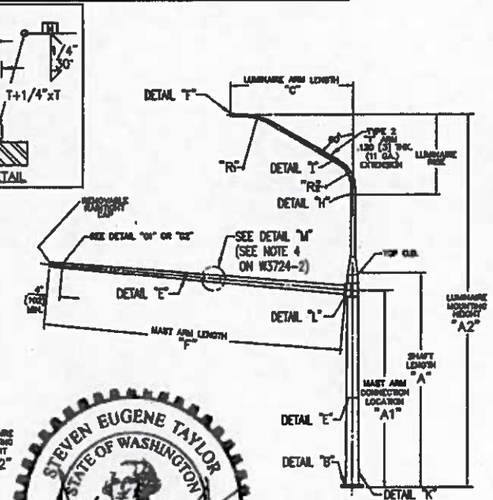

TYPE III SERIES "T"

MATERIAL SPECIFICATION	
SHAFT	STEEL OF 50,000 P.S.I. MINIMUM YIELD AFTER FABRICATION ASTM A-572 GR.50 ASTM A-595 GR. A ASTM A-709 GR.50, ASTM A-1008 GR.50 ASTM A-1011 GR.50,ASTM A-1018 GR.50 THE ABOVE LISTED MATERIALS ARE USED BASED UPON AVAILABILITY AT TIME OF PURCHASE OF MATERIAL LOTS FOR PRODUCING POLE AND ARM SHAFTS
BASE PL., FLANGES & MISC. PLATE	ASTM A-36 STEEL
PIPE	ASTM A-53 GRADE "B" OR ASTM A-500 GRADE "B"
ANCHOR BOLTS	ASTM F-1554 GR. 105
POLE FINISH	HOT DIP GALVANIZED PER ASTM A-123
HARDWARE FINISH	HOT DIP GALVANIZED PER ASTM A-153
WELDS LONGITUDINAL	BUTT WELD BY THE ELECTRICAL RESISTANCE PROCESS
WELDS CIRCUMFERENTIAL	BUTT WELD WITH PERMANENT BACK-UP RING (CONTINOUS)

NOTES

WELD: ALL BUTT WELDS TO BE GROUND FLUSH WITH BASE METAL.

WELDING OF STRUCTURES SHALL BE IN ACCORDANCE WITH THE LATEST EDITION OF THE AWS STRUCTURAL WELDING CODE D1.1 – STEEL LONGITUDINAL SEAM WELD IS 60% MIN. PENTRATION. EXCEPT FOR 6" FROM END OF SECTION AT FLANGE, BASEPLATE AND SLIP JOINT ARE 100% PENETRATION.

TOLERANCES SHALL BE IN ACCORDANCE WITH SECTIONS 5.14.1 THROUGH 5.14.3 OF THE "SPECIFICATION FOR STRUCTURAL SUPPORTS OF HIGHWAY SIGNS, LUMINAIRES AND TRAFFIC SIGNALS" AASHTO 2009.

THE PERMISSIBLE VARIATION FOR STRAIGHTNESS OF THE TAPERED SECTIONS SHALL BE (.025 X SHAFT LENGTH) [.6]

EXAMPLE:
A POLE WITH A SHAFT LENGTH OF 30' [9.1] SHALL NOT VARY MORE THAN 3/4"—(.025 X 30) =.75 . [19]

THE MOUNTING HEIGHTS WHICH ARE LISTED ON DRAWING(S) SHALL HAVE A PERMISSIBLE TOLERANCE OF ±6" [152].

1. OMITTED.
2. IF DESIRED SIGNAL ARM LENGTH IS NOT LISTED IN TABLES, THE NEXT LONGEST SIGNAL ARM SHALL BE USED WITH THE END CUT OFF TO FORM APPROPRIATE LENGTH.
3. 3" SCH. 40 PIPE FOR LUM. ARMS 10' [3] AND LESS. 3 1/2" SCH. 40 PIPE FOR LUM. ARMS 12' [3.7] AND LARGER.
4. 3 1/2" SCH. 40 PIPE FOR LUM. ARMS 10' [3] AND LESS. 4" SCH. 40 PIPE FOR LUM. ARMS 12' [3.7] AND LONGER.
5. DIMENSIONS IN [ ] ARE METRIC. INCHES CONVERTED TO MILLIMETERS AND FEET TO METERS.
6. 3/4" PL. TO BE WELDED TO POLE TOP, SKIPPING SLOTTED AREA, THEN CONE IS WELD IN PLACE.
7. WHERE DISTANCE BETWEEN EXTENSION & TOP OF SMA CONNECTION BOX IS LESS THAN 9", HANDHOLE TO BE LOCATED AT CENTER OF BOX, OPPOSITE THE ARM AND CABLE HOOK LOCATED @ 90°
8. USE 7 GAGE MIN. BACKING RING FOR 7 GAGE SHAFTS. USE 1/4" MIN. BACKING RING FOR ALL OTHER SHAFT THICKNESSES. BACKING RING TO BE 1" MINIMUM HEIGHT.

APPROVED
Manufacturer's Pole Plan
Approved For Listing As A
Pre-Approved Drawing
WSDOT Bridge & Structures Office
By GB Date 1-12-2016

STEVEN EUGENE TAYLOR
STATE OF WASHINGTON
50244
REGISTERED PROFESSIONAL ENGINEER
1/11/2016

REV	DATE	DESCRIPTION	BY	APPR
L	1/16	ADD A-325 TO SLIP JOINT DETAILS	BB	MM
K	12/14	PER WA. D.O.T. REQUEST	ST	GM
J	12/11	GENERAL REVISIONS	MHM	GM

Ameron POLE PRODUCTS DIVISION

STATE OF WASHINGTON
TYPE II AND III SERIES

DRAWN: MHM	DATE: 6/02	SCALE: N.T.S.	DWG.NO.	REV.
APPR: JB	DATE: 6/02	SHT 1 OF 2	W3724-1	L