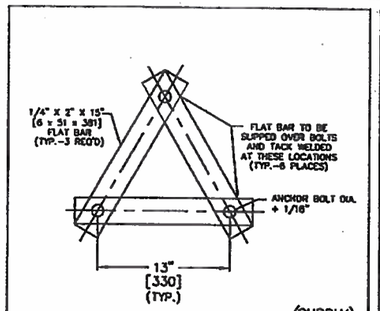

DETAIL "D" STRAP TEMPLATE ASSEMBLY DETAIL (SUPPLY (2) PER POLE)

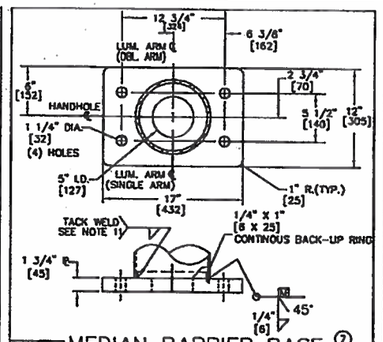

DETAIL "C" MEDIAN BARRIER BASE ⑦

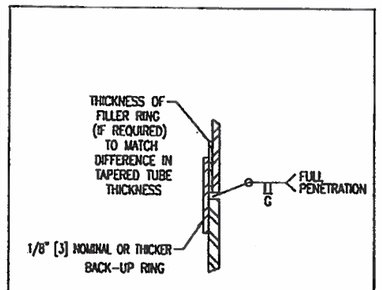

DETAIL "F" SPLICE DETAIL

WHEN REQUIRED BASED UPON MATERIAL AVAILABILITY

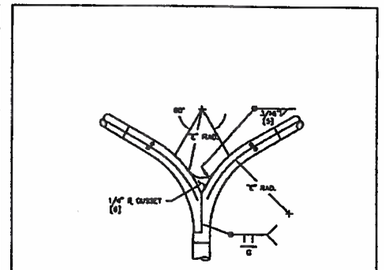

DETAIL "G" JOINT DETAIL ②

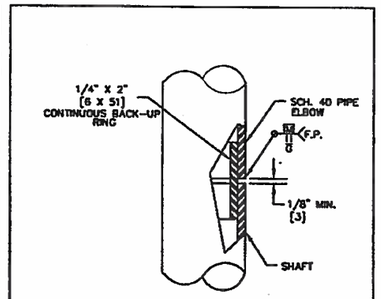

DETAIL "H" ELBOW CONNECTION

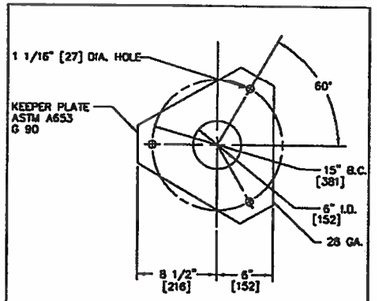

DETAIL "C" KEEPER PLATE

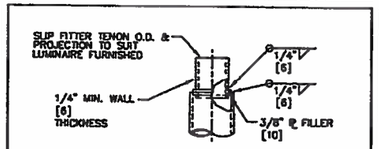

DETAIL "J" POST TOP MOUNTING

NO LUMINAIRE ARM

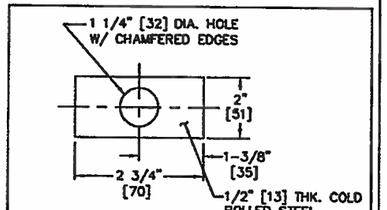

DETAIL "O" PLATE WASHER

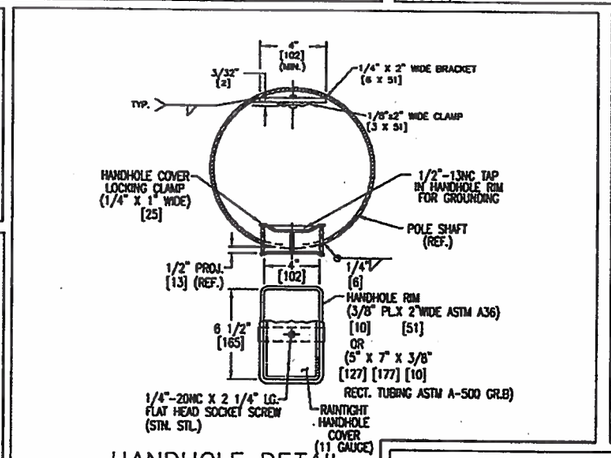

DETAIL "L" HANDHOLE DETAIL

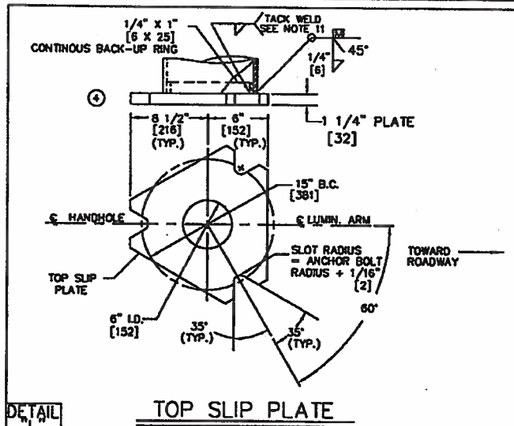

DETAIL "A" TOP SLIP PLATE

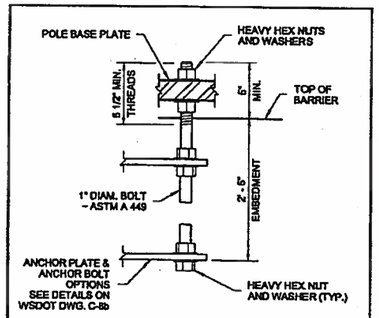

DETAIL "B" ANCHOR BOLT DETAIL FOR MEDIAN BARRIER BASE

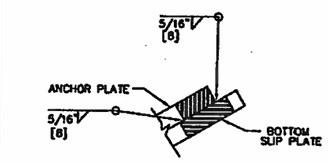

SECTION A-A

DETAIL "A"

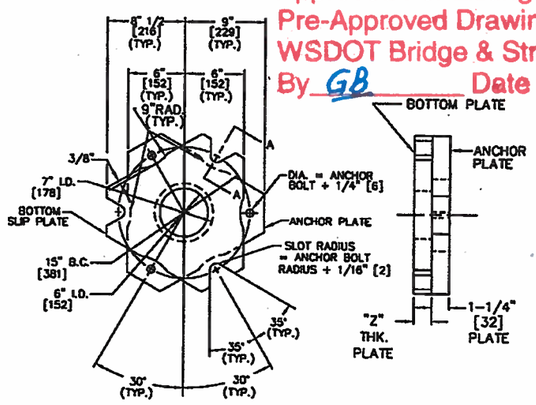

BOTTOM SLIP PLATE & ANCHOR PLATE

DETAIL "I"

APPROVED
Manufacturer's Pole Plan
Approved For Listing As A
Pre-Approved Drawing
WSDOT Bridge & Structures Office
By GB Date 3-13-12

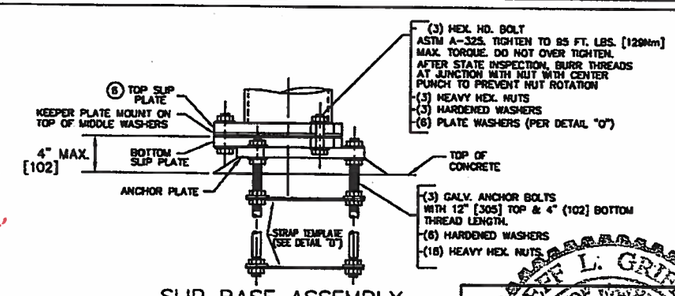

SLIP BASE ASSEMBLY

DETAIL "N"

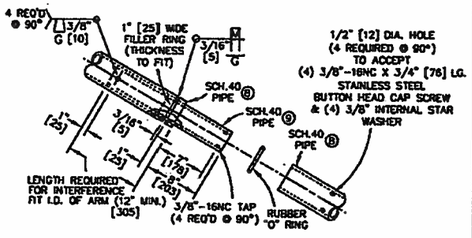

ARM CONNECTION

DETAIL "M"

MATERIAL SPECIFICATION	
SHAFT	STEEL OF 50,000 P.S.I. MINIMUM YIELD AFTER FABRICATION ASTM A-572 GR.50 ASTM A-595 GR. A ASTM A-709 GR.50,ASTM A-1008 GR.50 ASTM A-1011 GR.50, ASTM A-1018 GR.50 THE ABOVE LISTED MATERIALS ARE USED BASED UPON AVAILABILITY AT TIME OF PURCHASE OF MATERIAL LOTS FOR PRODUCING POLE AND ARM SHAFTS
BOTTOM & TOP SLIP PL., ANCHOR PL. & MEDIAN BARRIER BASE	ASTM A-572 GR. 50 STEEL
MISC. PLATE	ASTM A-36
PIPE	ASTM A-53 GRADE "B" OR ASTM A-500 GRADE "B"
ANCHOR BOLTS	ASTM F-1554 GR. 105
POLE FINISH	HOT DIP GALVANIZED PER ASTM A-123
HARDWARE FINISH	HOT DIP GALVANIZED PER ASTM A-153
WELDS LONGITUDINAL	BUTT WELD BY THE ELECTRICAL RESISTANCE PROCESS
WELDS CIRCUMFERENTIAL	BUTT WELD WITH PERMANENT BACK-UP RING (CONTINOUS)
TOP SLIP PLATE	ASTM A-572 GR. 50 STEEL
MEDIAN BARRIER PL.	ASTM A-572 GR. 50 STEEL

NOTES

① WELD: ALL BUTT WELDS TO BE GROUND FLUSH WITH BASE METAL. WELDING OF STRUCTURES SHALL BE IN ACCORDANCE WITH THE LATEST EDITION OF THE AWS STRUCTURAL WELDING CODE D1.1 – STEEL. LONGITUDINAL SEAM WELD IS 60% MIN. PENTRATION. EXCEPT FOR 6" FROM END OF SECTION AT FLANGE, BASEPLATE AND SLIP JOINT ARE 100% PENETRATION.

ORDERING INFO

SERIES — LUMINAIRE ARM LENGTH — DWG. NO.

T-4010D-SB-M3720

LUMINAIRE MOUNTING HEIGHT

D = DOUBLE ARM

SB = SLIP BASE
FB = FIXED BASE
BM = BRIDGE MOUNT
MB = MEDIAN BARRIER

② DOUBLE ARM CONNECTIONS ARE FABRICATED FROM TWO PIPE ELBOWS WELDED BACK TO BACK AND A 1/4" [6] GUSSET.

③ POLES WITH DOUBLE ARMS ARE TO HAVE A 7 GA. THICKNESS. ALL DAVIT SECTIONS ARE TO BE 11 GA.

④ FOR POLES REQUIRING DIFFERENT POLE LENGTHS "F" THAN SHOWN, ADJUST POLE BASE DIAMETER BY USING A TAPER OF (0.14 IN/FT) [12mm/m].

⑤ ALL WIREWAYS SHALL BE DEBURRED,ROUNDED AND SMOOTH FOR WIRE PROTECTION PURPOSES.

⑥ THE TOP SLIP PLATE WITHOUT BOTTOM SLIP PLATE AND ANCHOR PLATE IS A FIXED BASE. WHEN A FIXED BASE IS REQUIRED BY THE CONTRACT PLANS, ROTATE THE ANCHOR BOLT PATTERN SHOWN ON STANDARD PLAN "J-28.30-00" AND INSTALL THE TOP SLIP PLATE DIRECTLY ON THE FOUNDATION.

⑦ THE MEDIAN BARRIER SHALL BE USED ON 40'[12.2] 45'[13.7] 50' [15.2] LIGHTING STANDARDS WITH 12' [3.7] MAXIMUM LENGTH DOUBLE ARMS.

⑧ 3 1/2" SCH. 40 PIPE FOR LUM. ARMS 10'-0" [3] AND LESS 4" SCH. 40 PIPE FOR LUM. ARMS 12'-0" [3.7] AND LONGER.

⑨ 3" SCH. 40 PIPE FOR LUM.ARMS 10'-0" [3] AND LESS. 3 1/2" SCH. 40 PIPE FOR LUM. ARMS 12'-0" [3.7] AND LONGER.

⑩ WHEN NEEDED FOR GALVANIZING LIFTING PURPOSES, A NOMINAL 3/8" DIAMETER HOLE WILL BE PLACED AT APPROXIMATELY 1" FROM END OF SHAFT.

⑪ TACK WELDS USED FOR FIT-UP, QUANTITY BASED ON SECTION SIZE.

JEFF L. GRIFFIN
STATE OF WASHINGTON
33467
REGISTERED PROFESSIONAL ENGINEER
12/14/11

EXPIRES 7/30/12

MATERIAL LIST		
QTY.	"H1"	DESCRIPTION

REV	DATE	DESCRIPTION	BY	APPR
G	12/11	GENERAL REVISIONS	MHM	GM
F	3/08	REV. ANCHOR BOLT MATL & NOTE 10	BB	GM
E	3/07	REV. PER STATES MARK-UP	JB	GM

AGENCY	
PROJECT	
DISTRIBUTOR	
CONTRACTOR	
CUSTOMER ORDER NO.	
AMERON NO.	

Ameron POLE PRODUCTS DIVISION

STATE OF WASHINGTON
"T" SERIES LIGHTING STANDARD

THIS DOCUMENT CONTAINS INFORMATION WHICH IS PROPRIETARY TO AMERON. IT SHALL NOT BE REPRODUCED, USED OR DISCLOSED TO ANYONE WITHOUT THE PRIOR WRITTEN PERMISSION OF AMERON.

DRAWN: MHM	DATE: 02/03	SCALE	DWG.NO.	REV.
APPR: RD	DATE: 02/03		W3720-1	G