RATING NOTE:
DESIGNED PER AASHTO 2009 5TH ED.
DESIGN LIFE 50 YEARS
BASIC WIND SPEED: 90MPH

MATERIAL SPECIFICATION	
PIPE	ASTM–A53 GR. B
PLATE	ASTM–A36
A.BOLTS	ASTM–F1554 GR 55
A.BOLT NUTS	ASTM–A194 2H
FLAT WASHER	ASTM–F436
HDW FINISH	ASTM–A153
STRCT FINISH	ASTM–A123

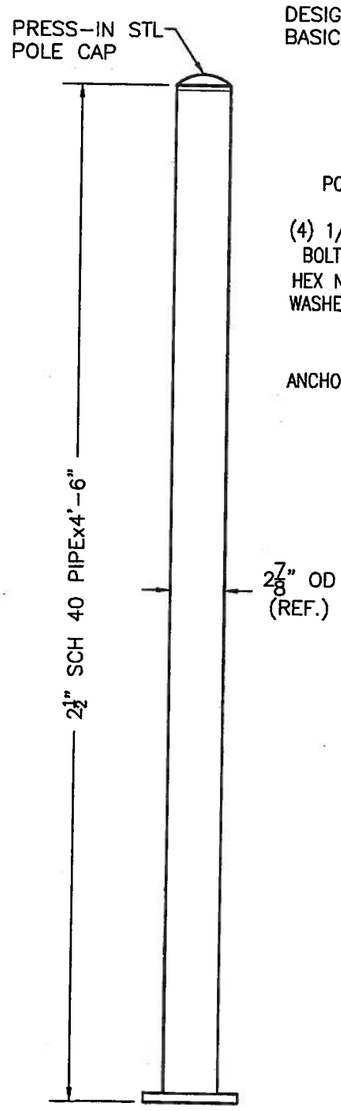

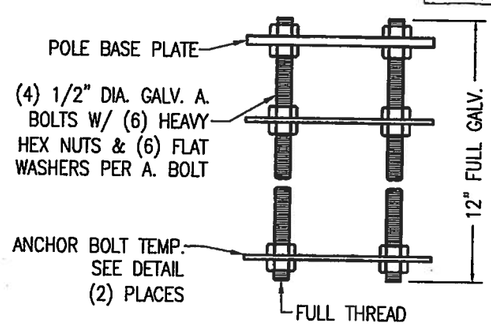

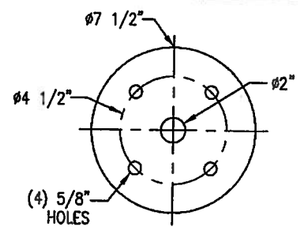

ANCHOR BOLT TEMPLATE
(1/4" THK)

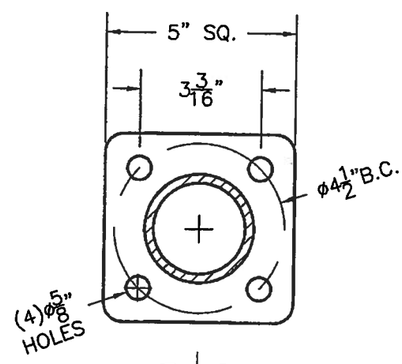

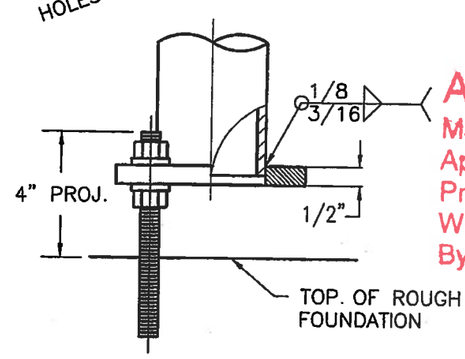

STATE OF OHIO
PAUL E. HAIG
E-041183
6/3/11
REGISTERED
PROFESSIONAL ENGINEER

APPROVED
Manufacturer's Pole Plan
Approved For Listing As A
Pre-Approved Drawing
WSDOT Bridge & Structures Office
By GB Date 8-21-2011

R06		ADDED ANCHOR BOLT CAGE	6/3/11 JMC SAB	WASHINGTON PED POLE POLE TYPE P.P.B.
R05		ADDED ANCHOR BOLT CAGE	4/25/11 EGB SAB	LOF – REQ.# --- S.O.# --- ENG.REF.# --- CAD# ---
R04		UPDATED TO 2009 AASHTO; A.BOLT SPEC WAS ASTM–A307; ADDED (1) HEX NUT & (2) FLAT WASHERS; WAS (1) LOCK WASHER.	12/7/10 GCH SAB	Union Metal CORPORATION R06
REVISIONS				DRAWN TN DATE 7/14/83 CHECKED MRK DRAWING NO. TA–10035