APPROVED
Manufacturer's Pole Plan
Approved For Listing As A
Pre-Approved Drawing
WSDOT Bridge & Structures Office
By GB Date 5-12-2014

MATERIAL SPECIFICATIONS	
PIPE	ASTM A53 GR B
PLATE	ASTM A36
ANCHOR BOLTS	ASTM F1554 GR 55
ANCHOR BOLT NUTS	ASTM A194 2H or A563 GR DH
FLAT WASHERS	ASTM F436
STRUCTURE FINISH	HD GALV TO ASTM A123
HARDWARE FINISH	HD GALV TO ASTM A153

ANCHOR BOLT LENGTH	
STANDARD DESIGN	18"
CURB BASE DESIGN	24"

RATING NOTE:
DESIGNED PER AASHTO 2009 5TH ED.
DESIGN LIFE 50 YEARS
BASIC WIND SPEED: 90MPH

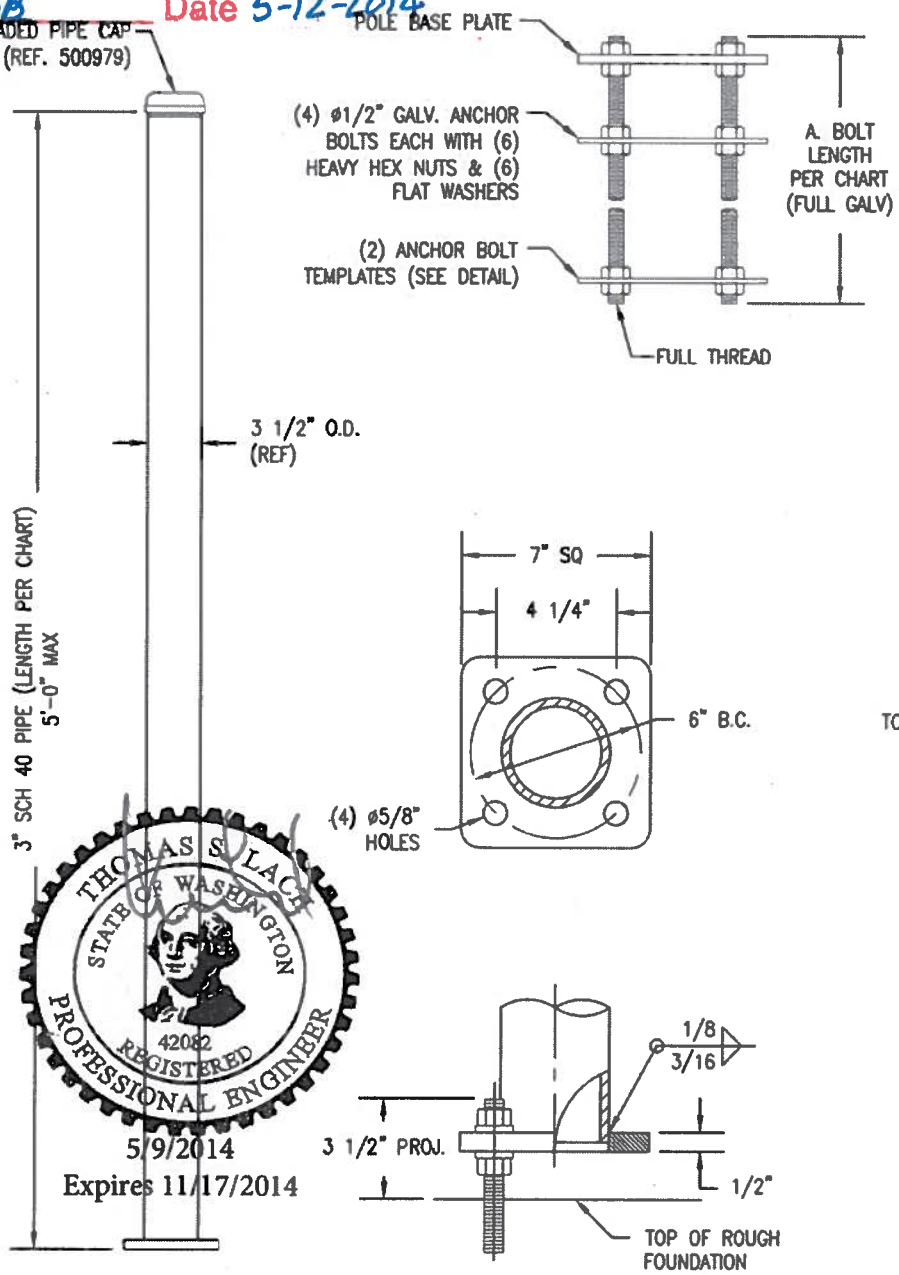

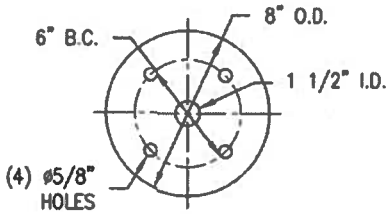

ANCHOR BOLT TEMPLATE
(1/4" THK)

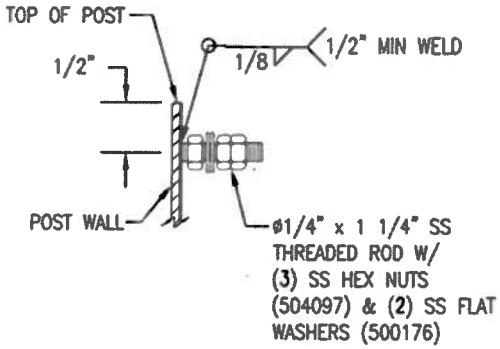

GROUNDING CONNECTION DETAIL

THOMAS S. LACY
STATE OF WASHINGTON
42082
REGISTERED PROFESSIONAL ENGINEER
5/9/2014
Expires 11/17/2014

QTY	U.M.C. DESIGN NO.	POLE LENGTH
	TA-10035-Y1	

R8		PIPE WAS 2 1/2" SCH 40; B.C. WAS 4 1/2"; BASE PLATE WAS 5" SQ; REVISED A. BOLT CAGE & TEMPLATE TO 6" B.C.; A. BOLTS WERE 26"; POLE CAP WAS DRIVE-IN; ADDED A563 A. BOLT NUTS	4/30/14 FJP	WASHINGTON PED POLE POLE TYPE P.P.B.
R7		POLE HEIGHT WAS 4'-6"	8/16/13 JMW	LOF ____ ENG.REF.# ____ REQ.# ____ S.O.# ____ CAD# ____
R06.1		ANCHOR BOLT LENGTH WAS 12"	8/6/13 FJP	Union Metal CORPORATION — R8
REVISIONS				DRAWN TN; DATE 7/14/83; CHECKED max — DRAWING NO. TA-10035