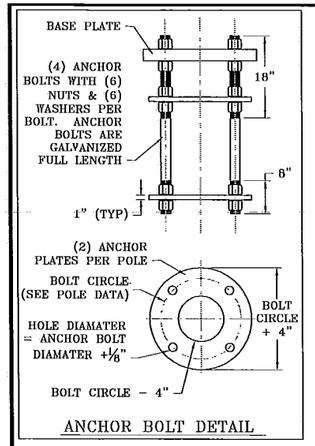


ANCHOR BOLT DETAIL

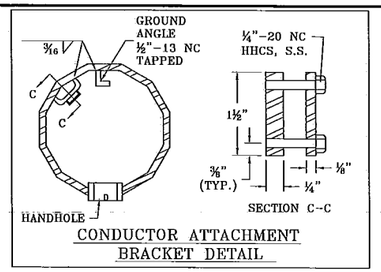


CONDUCTOR ATTACHMENT BRACKET DETAIL

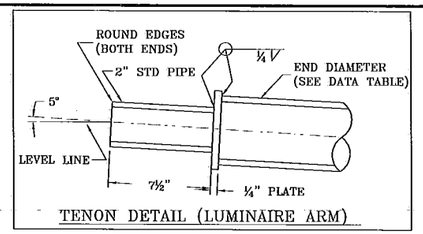


TENON DETAIL (LUMINAIRE ARM)

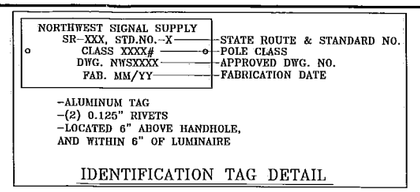


IDENTIFICATION TAG DETAIL

POLE DATA

| ITEM | POLE CLASS (RESULTANT HORIZONTAL TENSION) | | | | | | |
|---|---|---|---|---|---|---|---|
| | 1900# | 2700# | 3700# | 4800# | 5600# | 6300# | 7200# |
| POLE GAGE | .25 | .25 | .25 | .3125 | .3125 | .3125 | .3125 |
| BASE PLATE WIDTH | 15" | 15" | 17" | 18" | 18" | 20" | 20" |
| ANCHOR BOLT CIRCLE | 16" | 16" | 19" | 20" | 20" | 22" | 22" |
| POLE BASE DIA | 10" | 12" | 14" | 14" | 15" | 16" | 17" |
| BASE PLATE THICKNESS | 1 3/4" | 2" | 2 1/2" | 2 1/2" | 2 3/4" | 2 3/4" | 3" |
| ANCHOR BOLT SIZE | 1"x36" | 1 1/4"x60" | 1 3/8"x60" | 1 1/2"x60" | 1 1/2"x60" | 1 3/4"x66" | 1 3/4"x66" |

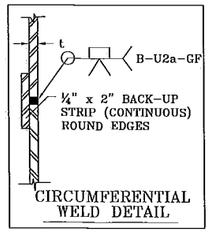


CIRCUMFERENTIAL WELD DETAIL

LUMINAIRE ARM DATA

| ARM LENGTH (FT) | BASE DIAMETER (IN) | END DIAMETER (IN) | THICKNESS (IN) | TOTAL LENGTH (FT) |
|---|---|---|---|---|
| 6 | 5.75 | 4 | .188 | 11.5 |
| 8 | 5.75 | 3.75 | .188 | 13.5 |
| 10 | 5.75 | 3.5 | .188 | 15.5 |
| 12 | 5.75 | 3.25 | .188 | 17.5 |
| 14 | 5.75 | 3 | .188 | 19.5 |
| 16 | 5.75 | 2.75 | .188 | 21.5 |

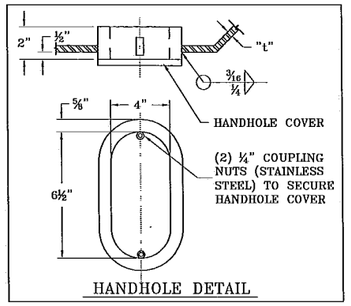


HANDHOLE DETAIL

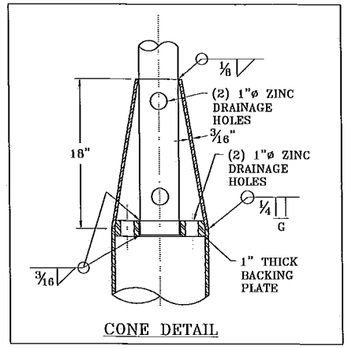


CONE DETAIL

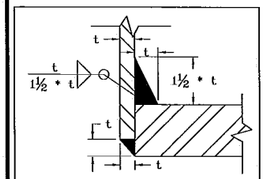


BASE WELD DETAIL

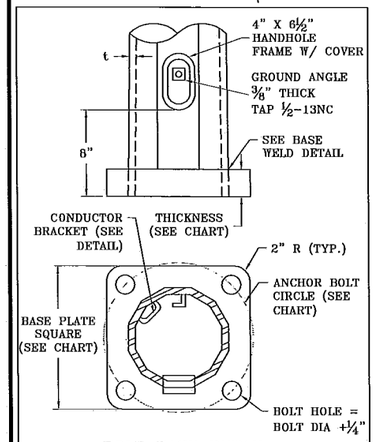


POLE BASE DETAIL

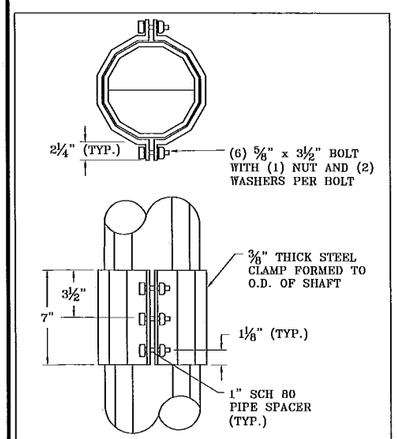


STRAIN CLAMP DETAIL

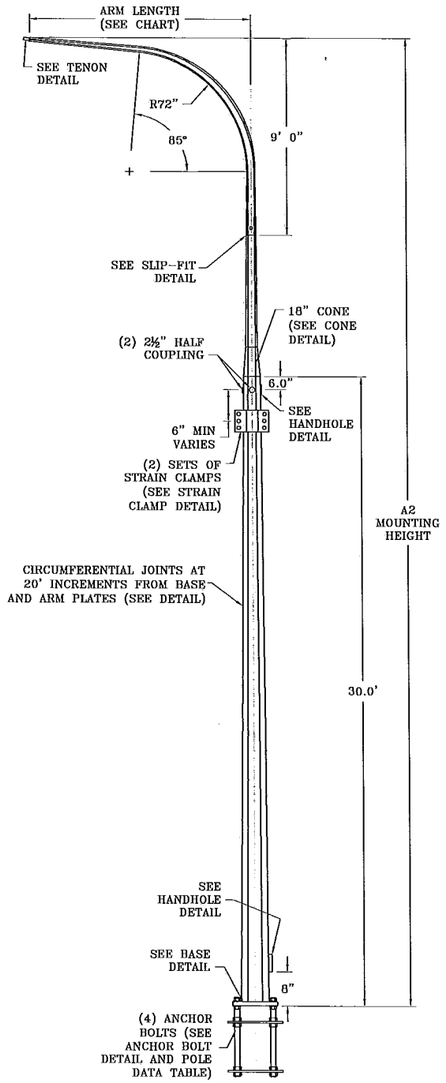


TYPE V

APPROVED
Manufacturer's Pole Plan
Approved For Listing As A
Pre-Approved Drawing
WSDOT Bridge & Structures Office
By GB Date 4-20-2011

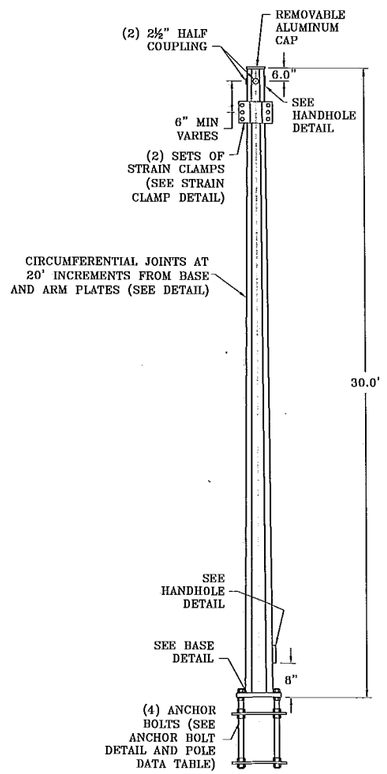


TYPE IV

POLE SCHEDULE

INTERSECTION:

| POLE # | CLASS | A2 | LUM. LEN. |
|---|---|---|---|
| | | | |
| | | | |
| | | | |
| | | | |
| | | | |
| | | | |
| | | | |
| | | | |
| | | | |

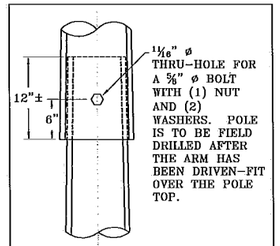


SLIP-FIT DETAIL

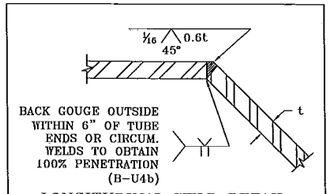


LONGITUDINAL WELD DETAIL

TWO PER TUBE, @ 180 DEGREES

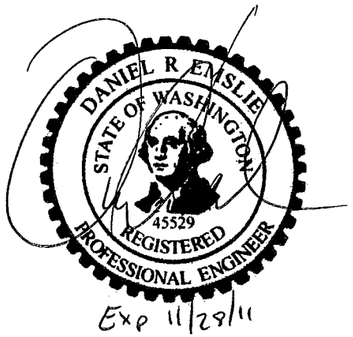


NOTES:

DESIGN CRITERIA
2009 AASHTO STANDARD SPECIFICATIONS FOR STRUCTURAL SUPPORTS FOR HIGHWAY SIGNS, LUMINAIRES, AND TRAFFIC SIGNALS.
- 90 MPH 3 SECOND GUST
- 50 YEAR DESIGN LIFE/RECURRENCE INTERVAL

GENERAL
- POLE AND MAST ARMS SHALL BE DODECAGONAL IN CROSS SECTION. POLE SHAFT SHALL HAVE TAPER OF 0.14 IN/FT.
- FABRICATION SHALL CONFORM TO 2009 AASHTO STANDARD SPECIFICATIONS FOR STRUCTURAL SUPPORTS FOR HIGHWAY SIGNS, LUMINAIRES, AND TRAFFIC SIGNALS AND AWS D1.1 STRUCTURAL STEEL WELDING CODE.
- LONGITUDINAL SEAM WELD IS 60% MIN. PENETRATION EXPECT FOR 6 INCHES FROM END OF SECTION AT FLANGE, BASE PLATE AND SLIP JOINT IS 100% PENETRATION.

MATERIALS
- ALL STEEL IN TUBES, BASE PLATES, FLANGE PLATES, GUSSET PLATES & HANDHOLE FRAMES SHALL CONFORM TO ASTM A572 GR50.
- ANCHOR BOLTS SHALL CONFORM TO ASTM F1554 GR 105, NUTS SHALL CONFORM TO ASTM A563 GR DH HEAVY HEX, WASHERS SHALL CONFORM TO ASTM F436 TYPE I.
- ANCHOR PLATE SHALL CONFORM TO ASTM A36.
- CONNECTION BOLTS SHALL CONFORM TO ASTM A325, NUTS SHALL CONFORM TO ASTM A563 GR DH HEAVY HEX, WASHERS SHALL CONFORM TO ASTM F436 TYPE I.
- GALVANIZING SHALL CONFORM TO ASTM A123 & A153.
- HANDHOLE COVERS SHALL CONFORM TO ASTM A1011 GR50.
- ALL PIPE TENONS AND WIRE GUIDES SHALL CONFORM TO ASTM A53 GR B.
- FASTENERS LESS THEN 1/2" IN DIAMETER SHALL BE STAINLESS STEEL OR BRASS.
- POLE CAPS SHALL BE CAST ALUMINUM.

| NO. | REVISION | DATE |
|---|---|---|
| 1 | UPDATED FOR AASHTO 2001 | 4/03 |
| 2 | UPDATED TO AASHTO 2009, NEW BOARDER, MINOR DESIGN CHANGES | 3/11 |

WSDOT TYPE IV & V STRAIN POLE STANDARD WITH TYPE I LUMINAIRE ARM

12965 SW Herman Rd.
Tualatin, OR 97062
PH: 503-635-4351
FX: 503-635-4341
www.nwsignal.com

Northwest Signal
Managing mobility

JOB NUMBER
XXXXXX

DRAWING NUMBER
NWS3520B

DESIGNED BY:
D. EMSLIE 6/18/08

DRAWING BY:
D. EMSLIE 6/18/08

CHECKED BY:
J. MEUSCH 6/27/08

SHEET 1 OF 1