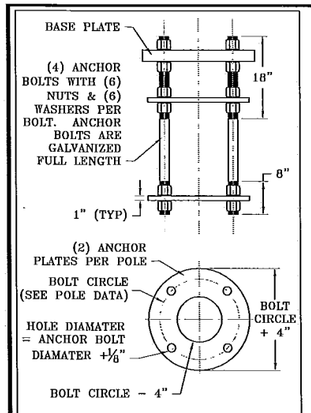

ANCHOR BOLT DETAIL

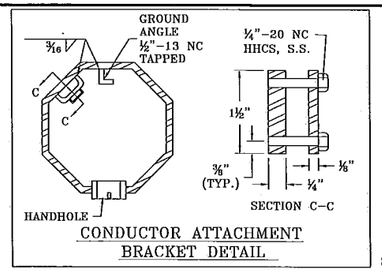

CONDUCTOR ATTACHMENT BRACKET DETAIL

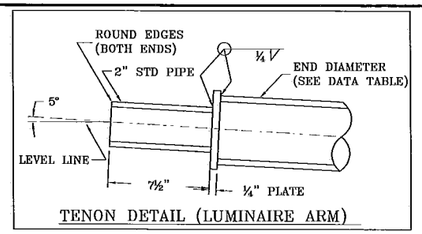

TENON DETAIL (LUMINAIRE ARM)

LUMINAIRE ARM DATA

ARM LENGTH (FT)	ELBOW DIAMETER (IN)(1)	R (IN)	THICKNESS (IN)	B (IN)
6	4	12	.188	24
8	4	12	.188	36
10	4	12	.188	51
12	4	12	.188	65
14	4	12	.188	79
16	4	12	.188	93

(1) ELBOWS TO BE MADE FROM STD PIPE

POLE SCHEDULE

INTERSECTION:

POLE #	POLE DESIGNATION	MAST ARM LENGTH (FT)	POLE HEIGHT (FT)	MAST ARM HEIGHT A1 (FT)	MOUNTING HEIGHT A2 (FT)	LUM. ARM LENGTH C (FT)	TENON LOCATIONS FROM POLE CENTERLINE (FT) B1	B3	B6	B9		3/4" COUPLING FROM POLE (FT) B5	NOTES

APPROVED
Manufacturer's Pole Plan
Approved For Listing As A
Pre-Approved Drawing
WSDOT Bridge & Structures Office
By GB
Date 4-20-2011

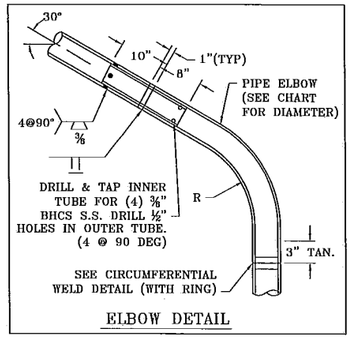

ELBOW DETAIL

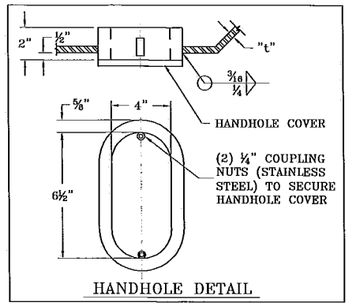

HANDHOLE DETAIL

POLE DATA

ARM LENGTH	TYPE II POLE DIA	TYPE II POLE THICK	TYPE III POLE DIA	TYPE III POLE THICK	BASE PLATE SQUARE	BASE PLATE THICK	ANCHOR BOLTS BOLT CIRCLE	ANCHOR BOLTS DIA X L X H
15--45	14	.25	14	.25	18	1.75	18	1.5 X 60 X PL
>45--65	17	.3125	17	.3125	22	2.0	22	2 X 60 X PL.

NORTHWEST SIGNAL SUPPLY
SR-XXX, STD.NO.-X — STATE ROUTE & STANDARD NO.
STA. XX+XX.XX — STATION
DWG. NWS3500 — APPROVED DWG. NO.
FAB. MM/YY — FABRICATION DATE

-ALUMINUM TAG
-(2) 0.125" RIVETS
-LOCATED 6" ABOVE HANDHOLE, AND WITHIN 6" OF LUMINAIRE AND MAST ARM CONNECTION POINTS

IDENTIFICATION TAG DETAIL

MAST ARM DATA

ARM LENGTH	ARM BASE DIA	ARM THICK.	ARM & POLE PLATE SQUARE	ARM PL THICK	BOLT SIZE	POLE PL THICK	BOLT CIRCLE	MAX LOAD AREA X DIST. (FT^3)
15	6	.188	15 X 15	1.5	1.25 X 3.5	1.5	15	268
20	7	.188	15 X 15	1.5	1.25 X 3.5	1.5	15	410
25	8	.188	15 X 15	1.5	1.25 X 3.5	1.5	15	552
30	10	.188	15 X 15	1.5	1.25 X 3.5	1.5	15	871
35	11	.188	15 X 15	1.5	1.25 X 3.5	1.5	15	1084
40	11	.25(1)	15 X 15	1.5	1.25 X 3.5	1.5	15	1297
45	11.5	.25(1)	15 X 15	1.5	1.25 X 3.5	1.5	15	1510
50	12	.25(1)	20 X 20	2.0	1.75 X 4	1.75	19.5	1723
55	13	.25(1)	20 X 20	2.0	1.75 X 4	1.75	19.5	1936
60	14.5	.25(1)	20 X 20	2.0	1.75 X 4	1.75	19.5	2638
65	15.5	.25(1)	20 X 20	2.0	1.75 X 4	1.75	19.5	2931

(1) THICKNESS SHALL BE REDUCED TO 0.188" 20' FROM POLE

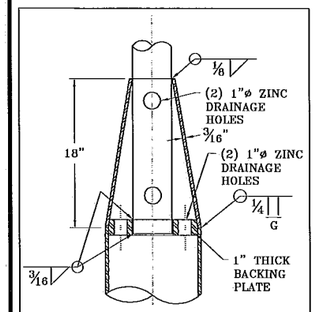

CONE DETAIL

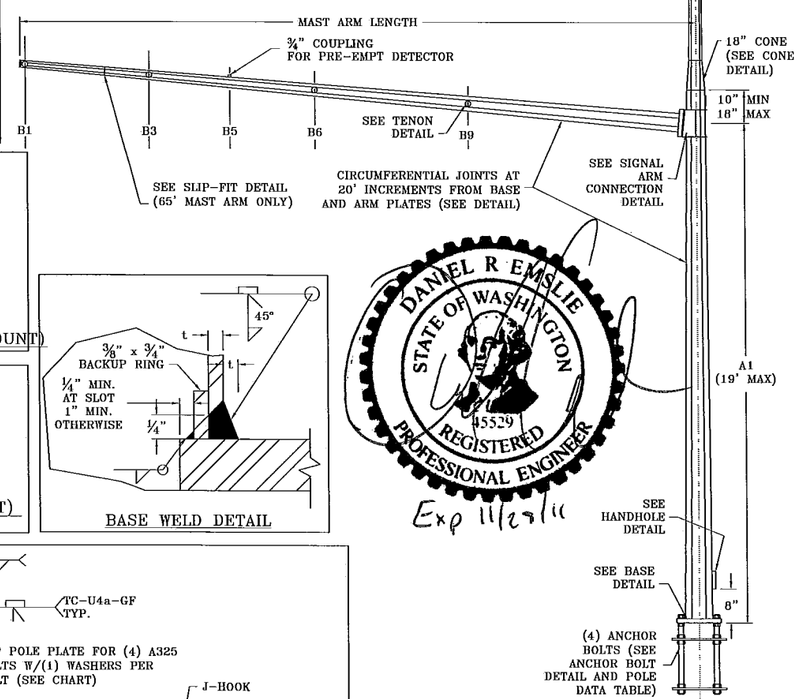

TYPE III

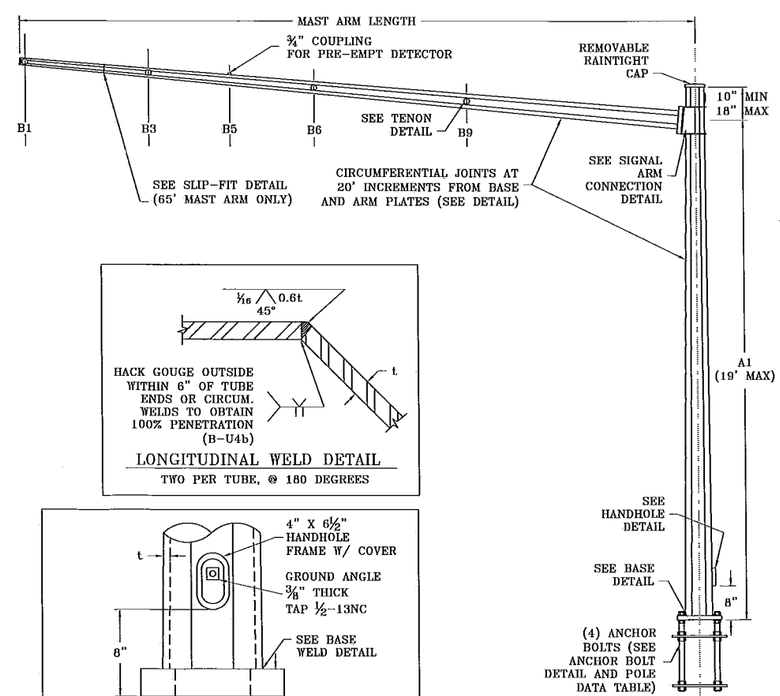

TYPE II

NOTES:

DESIGN CRITERIA
2009 AASHTO STANDARD SPECIFICATIONS FOR STRUCTURAL SUPPORTS FOR HIGHWAY SIGNS, LUMINAIRES, AND TRAFFIC SIGNALS.
- 90 MPH 3 SECOND GUST
- 50 YEAR DESIGN LIFE/RECURRENCE INTERVAL
- FATIGUE CATEGORY III WITH 65 MPH TRUCK VELOCITY

CAFL AT CRITICAL CONNECTIONS
- POLE TO BASE PLATE CONNECTION = E
- ARM TO PLATE CONNECTION = E
- SIMPLEX GUSSET = ET
- POLE WALL AT SIMPLEX GUSSET = E'
- POLE SHAFT = B'

LOADING
- LUMINAIRE, FACE AREA = 3.3 SQ FT, WEIGHT = 60 LBS.
- TRAFFIC SIGNAL, FACE AREA = 9.2 SQ FT, WEIGHT = 60 LBS.

GENERAL
- POLE AND MAST ARMS SHALL BE OCTAGONAL IN CROSS SECTION. POLE SHAFT SHALL HAVE TAPER OF 0.14 IN/FT.
- FABRICATION SHALL CONFORM TO 2009 AASHTO STANDARD SPECIFICATIONS FOR STRUCTURAL SUPPORTS FOR HIGHWAY SIGNS, LUMINAIRES, AND TRAFFIC SIGNALS AND AWS D1.1 STRUCTURAL STEEL WELDING CODE.
- LONGITUDINAL SEAM WELD IS 60% MIN. PENETRATION EXPECT FOR 6 INCHES FROM END OF SECTION AT FLANGE, BASE PLATE AND SLIP JOINT IS 100% PENETRATION.

MATERIALS
- ALL STEEL IN TUBES, BASE PLATES, FLANGE PLATES, GUSSET PLATES & HANDHOLE FRAMES SHALL CONFORM TO ASTM A572 GR50.
- ANCHOR BOLTS SHALL CONFORM TO ASTM F1554 GR 105, NUTS SHALL CONFORM TO ASTM A563 GR DH HEAVY HEX, WASHERS SHALL CONFORM TO ASTM F436 TYPE I.
- ANCHOR PLATE SHALL CONFORM TO ASTM A36.
- CONNECTION BOLTS SHALL CONFORM TO ASTM A325, NUTS SHALL CONFORM TO ASTM A563 GR DH HEAVY HEX, WASHERS SHALL CONFORM TO ASTM F436 TYPE I.
- GALVANIZING SHALL CONFORM TO ASTM A123 & A153.
- HANDHOLE COVERS SHALL CONFORM TO ASTM A1011 GR50.
- ALL PIPE TENONS AND WIRE GUIDES SHALL CONFORM TO ASTM A53 GR B.
- FASTENERS LESS THEN 1/2" IN DIAMETER SHALL BE STAINLESS STEEL OR BRASS.
- POLE AND ARM CAPS SHALL BE CAST ALUMINUM.

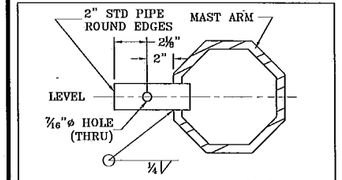

TENON DETAIL (TYPE "M" MOUNT)

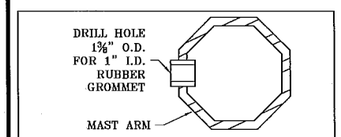

HOLE DETAIL (TYPE "N" MOUNT)
(OPTIONAL)

BASE WELD DETAIL

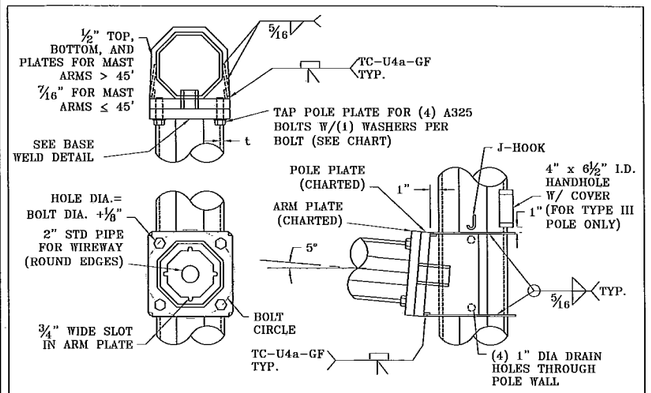

SIGNAL ARM CONNECTION DETAIL

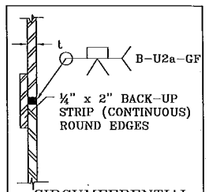

CIRCUMFERENTIAL WELD DETAIL

LONGITUDINAL WELD DETAIL
TWO PER TUBE, @ 180 DEGREES

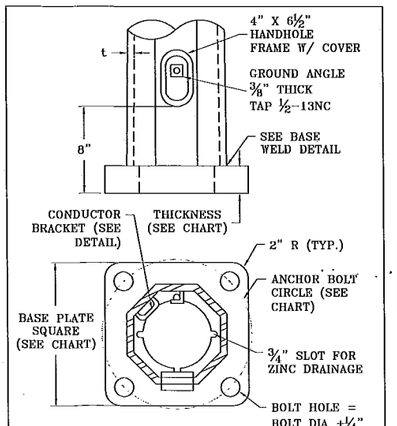

POLE BASE DETAIL

DANIEL R EMSLIE
STATE OF WASHINGTON
45529
REGISTERED
PROFESSIONAL ENGINEER
Exp 11/28/11

NO.	REVISION	DATE
1	UPDATED FOR AASHTO 2001	4/03
2	MINOR REVISONS	10/03
3	NEW BOARDER, MINOR DESIGN CHANGES	6/08
4	UPDATED TO AASHTO 2009, NEW BOARDER, MINOR DESIGN CHANGES	3/11

WSDOT TYPE II & III MAST ARM POLE STANDARD WITH TYPE II LUMINAIRE ARM

12965 SW Herman Rd.
Tualatin, OR 97062
PH: 503-635-4351
FX: 503-635-4341
www.nwsignal.com

Northwest Signal Inc.
Managing mobility

JOB NUMBER
XXXXXX

DRAWING NUMBER
NWS3505

DESIGNED BY:
D. EMSLIE 6/10/08

DRAWING BY:
D. EMSLIE 6/11/08

CHECKED BY:
J. MEUSCH 6/27/08

SHEET 1 OF 1