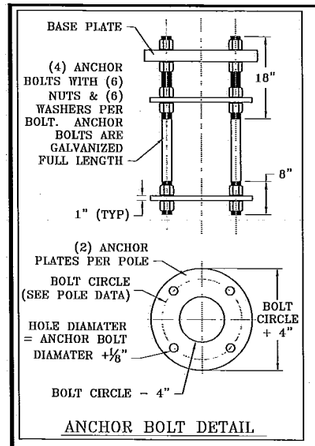


ANCHOR BOLT DETAIL

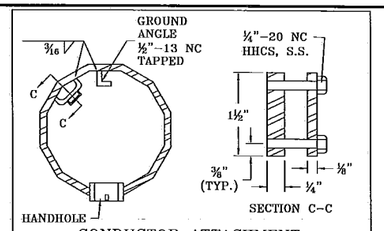


CONDUCTOR ATTACHMENT BRACKET DETAIL

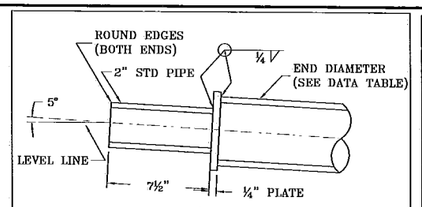


TENON DETAIL (LUMINAIRE ARM)

## LUMINAIRE ARM DATA

| ARM LENGTH (FT) | ELBOW DIAMETER (IN)(1) | R (IN) | THICKNESS (IN) | B (IN) |
|---|---|---|---|---|
| 6 | 4 | 12 | .188 | 24 |
| 8 | 4 | 12 | .188 | 36 |
| 10 | 4 | 12 | .188 | 51 |
| 12 | 4 | 12 | .188 | 65 |
| 14 | 4 | 12 | .188 | 79 |
| 16 | 4 | 12 | .188 | 93 |

(1) ELBOWS TO BE MADE FROM STD PIPE

## POLE SCHEDULE

INTERSECTION:

| POLE # | POLE DESIGNATION | MAST ARM LENGTH (FT) | POLE HEIGHT (FT) | MAST ARM HEIGHT A1 (FT) | MOUNTING HEIGHT A2 (FT) | LUM. ARM LENGTH C (FT) | TENON LOCATIONS FROM POLE CENTERLINE (FT) B1 | B3 | B6 | B9 | | 3/4" COUPLING FROM POLE ℄ (FT) B5 | NOTES |
|---|---|---|---|---|---|---|---|---|---|---|---|---|---|
| | | | | | | | | | | | | | |
| | | | | | | | | | | | | | |
| | | | | | | | | | | | | | |
| | | | | | | | | | | | | | |
| | | | | | | | | | | | | | |
| | | | | | | | | | | | | | |

APPROVED
Manufacturer's Pole Plan
Approved For Listing As A
Pre-Approved Drawing
WSDOT Bridge & Structures Office
By GB Date 4-20-2011

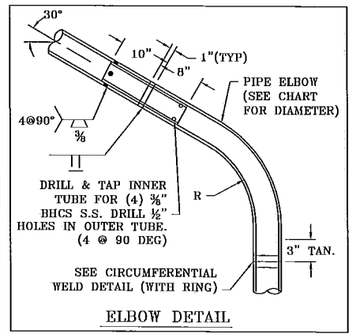


ELBOW DETAIL

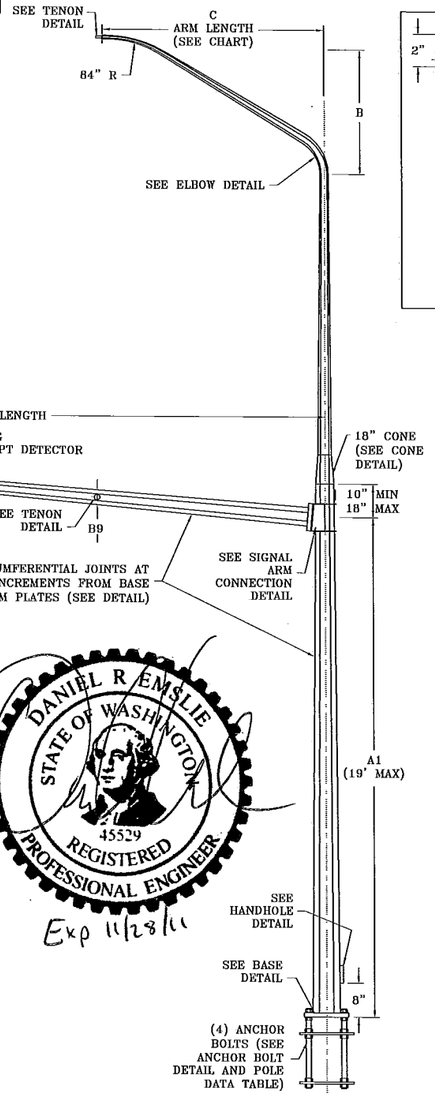


TYPE III

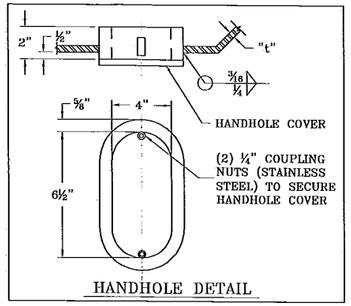


HANDHOLE DETAIL

## POLE DATA

| ARM LENGTH | TYPE II POLE DIA | TYPE II POLE THICK | TYPE III POLE DIA | TYPE III POLE THICK | BASE PLATE SQUARE | BASE PLATE THICK | ANCHOR BOLTS BOLT CIRCLE | ANCHOR BOLTS DIA X L X H |
|---|---|---|---|---|---|---|---|---|
| 15-45 | 14 | .25 | 14 | .25 | 18 | 1.75 | 18 | 1.5 X 60 X PL. |
| >45-65 | 17 | .3125 | 17 | .3125 | 22 | 2.0 | 22 | 2 X 60 X PL. |

## MAST ARM DATA

| ARM LENGTH | ARM BASE DIA | ARM THICK. | ARM & POLE PLATE SQUARE | ARM PL THICK | BOLT SIZE | POLE PL THICK | BOLT CIRCLE | MAX LOAD AREA X DIST. (FT^3) |
|---|---|---|---|---|---|---|---|---|
| 15 | 6 | .188 | 15 X 15 | 1.5 | 1.25 X 3.5 | 1.5 | 15 | 268 |
| 20 | 7 | .188 | 15 X 15 | 1.5 | 1.25 X 3.5 | 1.5 | 15 | 410 |
| 25 | 8 | .188 | 15 X 15 | 1.5 | 1.25 X 3.5 | 1.5 | 15 | 552 |
| 30 | 10 | .188 | 15 X 15 | 1.5 | 1.25 X 3.5 | 1.5 | 15 | 871 |
| 35 | 11 | .188 | 15 X 15 | 1.5 | 1.25 X 3.5 | 1.5 | 15 | 1084 |
| 40 | 11 | .25(1) | 15 X 15 | 1.5 | 1.25 X 3.5 | 1.5 | 15 | 1297 |
| 45 | 11.5 | .25(1) | 15 X 15 | 1.5 | 1.25 X 3.5 | 1.5 | 15 | 1510 |
| 50 | 12 | .25(1) | 20 X 20 | 2.0 | 1.75 X 4 | 1.75 | 19.5 | 1723 |
| 55 | 13 | .25(1) | 20 X 20 | 2.0 | 1.75 X 4 | 1.75 | 19.5 | 1936 |
| 60 | 14.5 | .25(1) | 20 X 20 | 2.0 | 1.75 X 4 | 1.75 | 19.5 | 2638 |
| 65 | 15.5 | .25(1) | 20 X 20 | 2.0 | 1.75 X 4 | 1.75 | 19.5 | 2931 |

(1) THICKNESS SHALL BE REDUCED TO 0.188" 20' FROM POLE

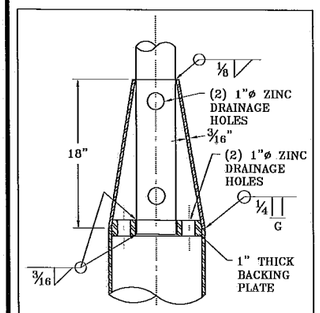


CONE DETAIL

NORTHWEST SIGNAL SUPPLY
SR-XXX, STD.NO.-X — STATE ROUTE & STANDARD NO.
STA. XX+XX.XX — STATION
DWG. NWS3500 — APPROVED DWG. NO.
FAB. MM/YY — FABRICATION DATE

-ALUMINUM TAG
-(2) 0.125" RIVETS
-LOCATED 6" ABOVE HANDHOLE, AND WITHIN 6" OF LUMINAIRE AND MAST ARM CONNECTION POINTS

IDENTIFICATION TAG DETAIL

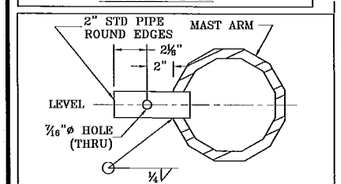


TENON DETAIL (TYPE "M" MOUNT)

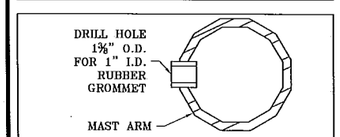


HOLE DETAIL (TYPE "N" MOUNT)
(OPTIONAL)

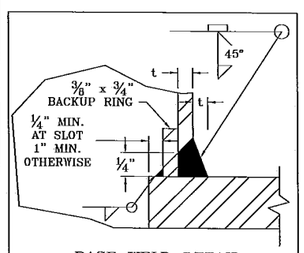


BASE WELD DETAIL

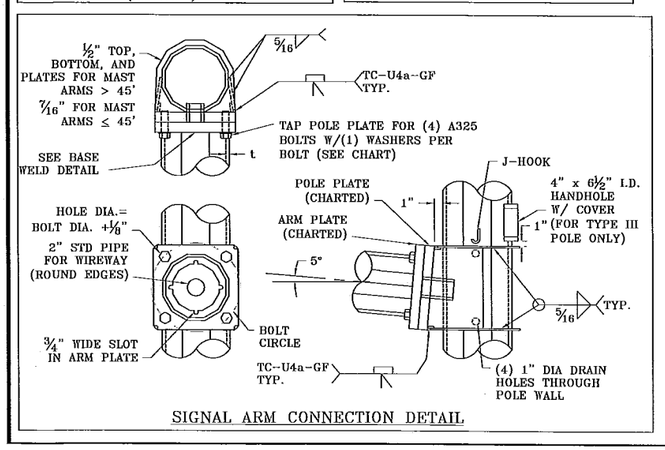


SIGNAL ARM CONNECTION DETAIL

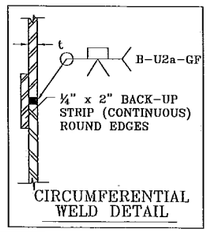


CIRCUMFERENTIAL WELD DETAIL

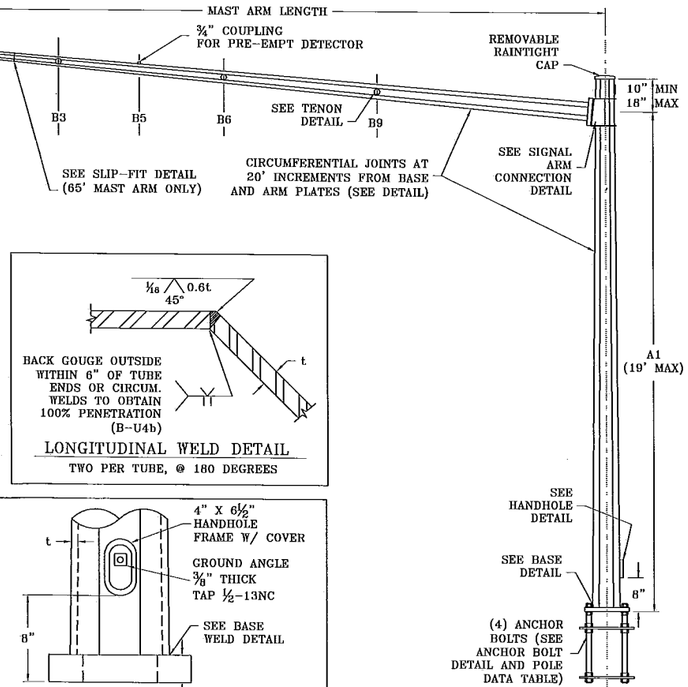


TYPE II




LONGITUDINAL WELD DETAIL
TWO PER TUBE, @ 180 DEGREES

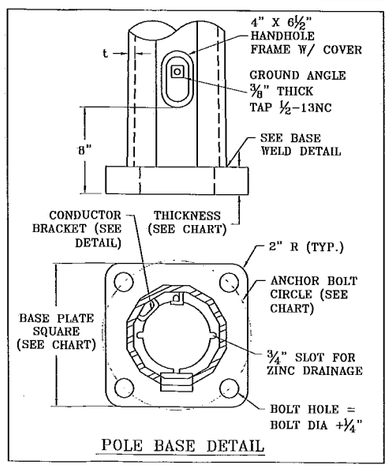


POLE BASE DETAIL

NOTES:

DESIGN CRITERIA
2009 AASHTO STANDARD SPECIFICATIONS FOR STRUCTURAL SUPPORTS FOR HIGHWAY SIGNS, LUMINAIRES, AND TRAFFIC SIGNALS.
- 90 MPH 3 SECOND GUST
- 50 YEAR DESIGN LIFE/RECURRENCE INTERVAL
- FATIGUE CATEGORY III WITH 65 MPH TRUCK VELOCITY

CAFL AT CRITICAL CONNECTIONS
- POLE TO BASE PLATE CONNECTION = E
- ARM TO PLATE CONNECTION = E
- SIMPLEX GUSSET = ET
- POLE WALL AT SIMPLEX GUSSET = E'
- POLE SHAFT = B'

LOADING
- LUMINAIRE, FACE AREA = 3.3 SQ FT, WEIGHT = 60 LBS.
- TRAFFIC SIGNAL, FACE AREA = 9.2 SQ FT, WEIGHT = 60 LBS.

GENERAL
- POLE AND MAST ARMS SHALL BE DODECAGONAL IN CROSS SECTION. POLE SHAFT SHALL HAVE TAPER OF 0.14 IN/FT.
- FABRICATION SHALL CONFORM TO 2009 AASHTO STANDARD SPECIFICATIONS FOR STRUCTURAL SUPPORTS FOR HIGHWAY SIGNS, LUMINAIRES, AND TRAFFIC SIGNALS AND AWS D1.1 STRUCTURAL STEEL WELDING CODE.
- LONGITUDINAL SEAM WELD IS 80% MIN. PENETRATION EXPECT FOR 6 INCHES FROM END OF SECTION AT FLANGE, BASE PLATE AND SLIP JOINT IS 100% PENETRATION.

MATERIALS
- ALL STEEL IN TUBES, BASE PLATES, FLANGE PLATES, GUSSET PLATES & HANDHOLE FRAMES SHALL CONFORM TO ASTM A572 GR50.
- ANCHOR BOLTS SHALL CONFORM TO ASTM F1554 GR 105, NUTS SHALL CONFORM TO ASTM A563 GR DH HEAVY HEX, WASHERS SHALL CONFORM TO ASTM F436 TYPE 1.
- ANCHOR PLATE SHALL CONFORM TO ASTM A36.
- CONNECTION BOLTS SHALL CONFORM TO ASTM A325, NUTS SHALL CONFORM TO ASTM A563 GR DH HEAVY HEX, WASHERS SHALL CONFORM TO ASTM F436 TYPE I.
- GALVANIZING SHALL CONFORM TO ASTM A123 & A153.
- HANDHOLE COVERS SHALL CONFORM TO ASTM A1011 GR50.
- ALL PIPE TENONS AND WIRE GUIDES SHALL CONFORM TO ASTM A53 GR B.
- FASTENERS LESS THEN 1/2" IN DIAMETER SHALL BE STAINLESS STEEL OR BRASS.
- POLE AND ARM CAPS SHALL BE CAST ALUMINUM.

| NO. | REVISION | DATE |
|---|---|---|
| 1 | UPDATED FOR AASHTO 2001 | 4/03 |
| 2 | MINOR REVISONS | 10/03 |
| 3 | NEW BOARDER, MINOR DESIGN CHANGES | 6/08 |
| 4 | UPDATED TO AASHTO 2009, NEW BOARDER, MINOR DESIGN CHANGES | 3/11 |

WSDOT TYPE II & III MAST ARM POLE STANDARD WITH TYPE II LUMINAIRE ARM

12965 SW Herman Rd.
Tualatin, OR 97062
PH: 503-635-4351
FX: 503-635-4341
www.nwsignal.com

JOB NUMBER
XXXXXX

Northwest Signal Inc.
Managing mobility

DRAWING NUMBER
NWS3505B

DESIGNED BY: D. EMSLIE 6/10/08
DRAWING BY: D. EMSLIE 6/11/08
CHECKED BY: J. MEUSCH 6/27/08

SHEET 1 OF 1