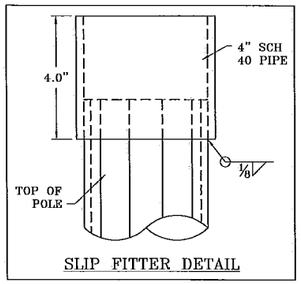

SLIP FITTER DETAIL

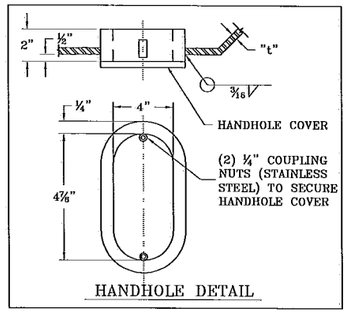

HANDHOLE DETAIL

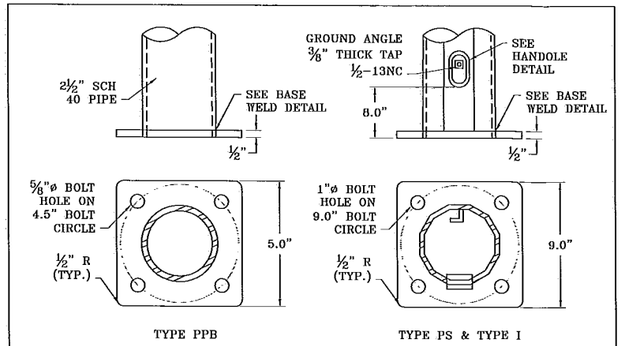

POLE BASE DETAIL

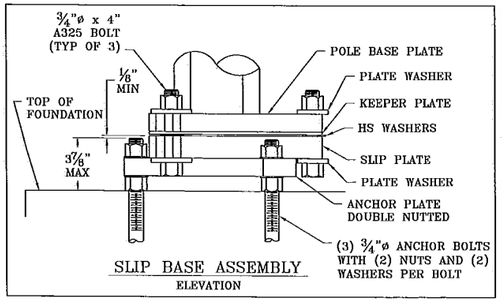

SLIP BASE ASSEMBLY
ELEVATION

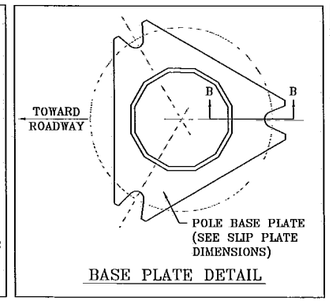

BASE PLATE DETAIL

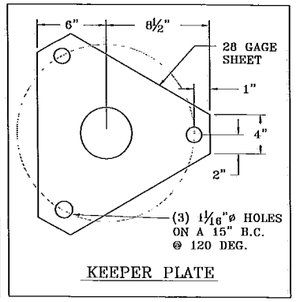

KEEPER PLATE

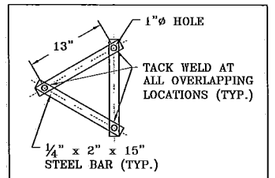

SLIP BASE STRAP DETAIL

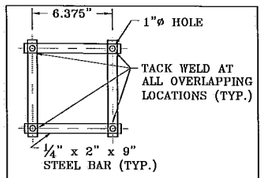

FIXED BASE STRAP DETAIL

POLE DATA

POLE DESIGNATION	BASE DIA (IN)	TOP DIA (IN)	THICK-NESS (IN)	ANCHOR BOLT (IN)
TYPE PPB	2.875	2.675	0.203	½"ø x 12" x 2"
TYPE PS	5.125	4.0	0.1875	¾"ø x 30"
TYPE I	5.5	4.0	0.1875	¾"ø x 30"
TYPE RM	5.5	4.0	0.1875	¾"ø x 30"
TYPE FB	6.0	4.0	0.1875	¾"ø x 30"

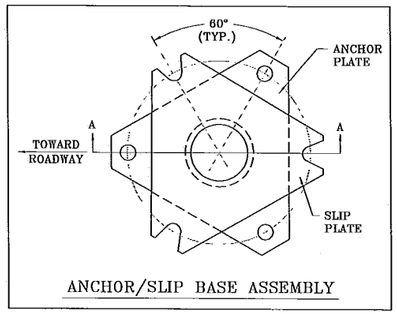

ANCHOR/SLIP BASE ASSEMBLY

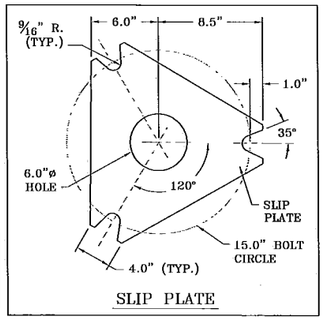

SLIP PLATE

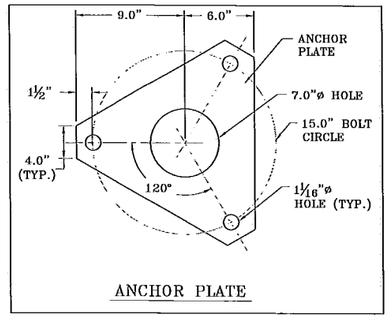

ANCHOR PLATE

APPROVED
Manufacturer's Pole Plan
Approved For Listing As A
Pre-Approved Drawing
WSDOT Bridge & Structures Office
By GB Date 4-20-2011

DANIEL R. EMSLIE
STATE OF WASHINGTON
45529
REGISTERED
PROFESSIONAL ENGINEER
Exp 11/28/11

POLE SCHEDULE

POLE NUMBER	POLE DESIGNATION

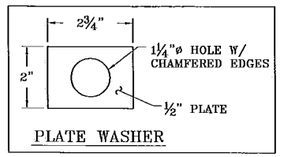

PLATE WASHER

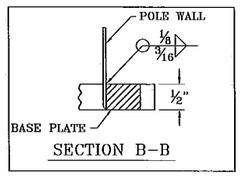

SECTION B-B

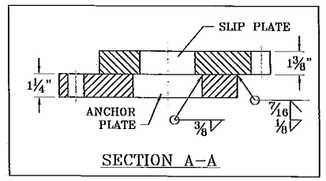

SECTION A-A

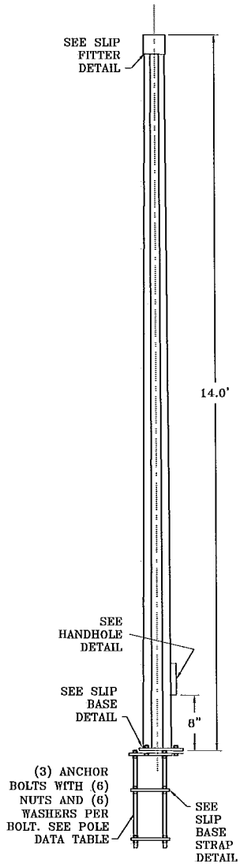

TYPE FB

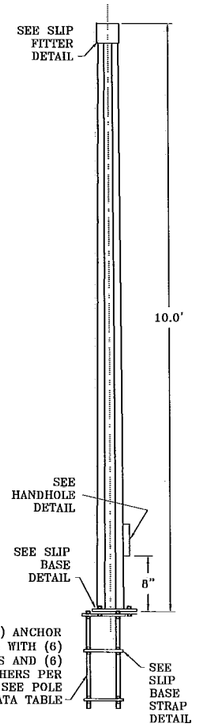

TYPE RM

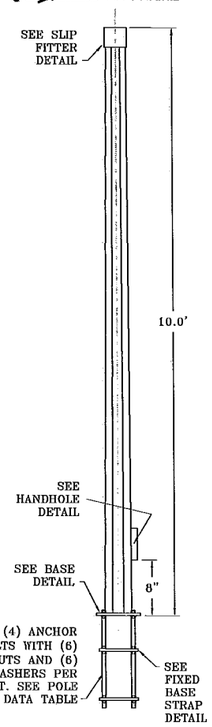

TYPE I

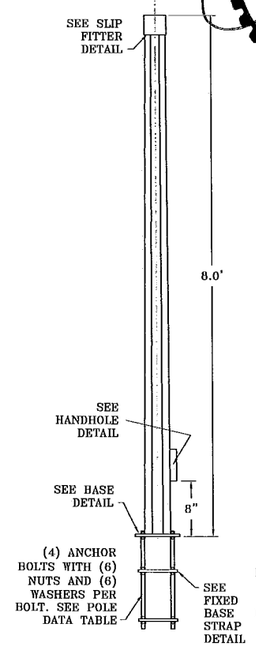

TYPE PS

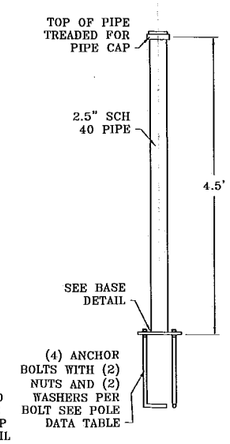

TYPE PPB

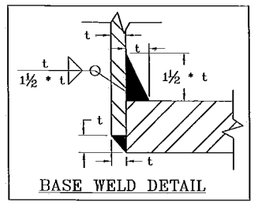

BASE WELD DETAIL

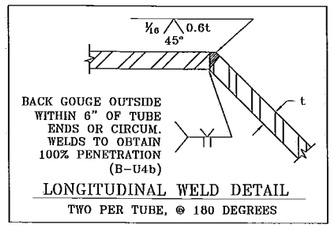

LONGITUDINAL WELD DETAIL
TWO PER TUBE, @ 180 DEGREES

NOTES:

DESIGN CRITERIA
2009 AASHTO STANDARD SPECIFICATIONS FOR STRUCTURAL SUPPORTS FOR HIGHWAY SIGNS, LUMINAIRES, AND TRAFFIC SIGNALS.
- 90 MPH 3 SECOND GUST
- 50 YEAR DESIGN LIFE/RECURRENCE INTERVAL

GENERAL
- POLE SHALL BE DODECAGONAL IN CROSS SECTION. POLE SHAFT SHALL HAVE TAPER OF 0.14 IN/FT.
- FABRICATION SHALL CONFORM TO 2009 AASHTO STANDARD SPECIFICATIONS FOR STRUCTURAL SUPPORTS FOR HIGHWAY SIGNS, LUMINAIRES, AND TRAFFIC SIGNALS AND AWS D1.1 STRUCTURAL STEEL WELDING CODE.
- LONGITUDINAL SEAM WELD IS 60% MIN. PENETRATION EXPECT FOR 6 INCHES FROM END OF SECTION AT FLANGE, BASE PLATE AND SLIP JOINT IS 100% PENETRATION.

MATERIALS
- ALL STEEL IN TUBES AND BASE PLATES SHALL CONFORM TO ASTM A572 GR50.
- ANCHOR BOLTS SHALL CONFORM TO ASTM F1554 GR 36 NUTS SHALL CONFORM TO ASTM A563A HEX, WASHERS SHALL CONFORM TO ASTM F844.
- CONNECTION BOLTS SHALL CONFORM TO ASTM A325, NUTS SHALL CONFORM TO ASTM A563 GR DJ HEAVY HEX, WASHERS SHALL CONFORM TO ASTM F436 TYPE I.
- GALVANIZING SHALL CONFORM TO ASTM A123 & A153.
- HANDHOLE FRAMES SHALL CONFROM TO ASTM A53.
- HANDHOLE COVERS SHALL CONFORM TO ASTM A1011 GR50.
- ALL PIPE SHALL CONFORM TO ASTM A53 GR B.
- FASTENERS LESS THEN ½" IN DIAMETER SHALL BE STAINLESS STEEL OR BRASS.
- POLE CAPS SHALL BE CAST ALUMINUM.

NO.	REVISION	DATE
1	UPDATED FOR AASHTO 2001	4/03
2	UPDATED TO AASHTO 2009, NEW BOARDER, MINOR DESIGN CHANGES	3/11

WSDOT TYPE PPB, TYPE PS, TYPE I, TYPE RM, & TYPE FB POST

12965 SW Herman Rd.
Tualatin, OR 97062
PH: 503-635-4351
FX: 503-635-4341
www.nwsignal.com

Northwest Signal Co.
Managing mobility™

JOB NUMBER
XXXXXX

DRAWING NUMBER
NWS3540B

DESIGNED BY:
D. EMSLIE 6/25/08

DRAWING BY:
D. EMSLIE 6/25/08

CHECKED BY:
J. MEUSCH 6/27/08

SHEET 1 OF 1