QTY	UMC DESIGN NUMBER	OAL HEIGHT	POLE TUBE SIZE	POLE BASE CONNECTION DATA						
				B.C.	S	F	P	T	H	ANCHOR BOLT SIZE
	P33-B318-Y1	20'-0"	7E-12.00x9.20x20'-0"	25 1/2	25	18	5 1/4	1 1/4	1 3/8	1 1/4" x 52"
	P33-B318-Y4	25'-0"	7E-13.00x9.50x25'-0"							
	P33-B318-Y5	30'-0"	7E-13.50x9.30x30'-0"							
	P33-B318-Y6	35'-0"	7E-14.00x9.10x35'-0"							
	P33-B318-Y2	40'-0"	7E-16.25x10.65x40'-0"							
	P33-B318-Y7	45'-0"	0.188-18.51x12.11x45'-0"-18 [0.188-18.25x11.95x45'-0"-18]							
	P33-B318-Y3	50'-0"	0.250-19.52x12.42x50'-0"-18 [0.250-19.25x12.25x50'-0"-18]							

7 GA = 0.179" WALL THICKNESS
3 GA = 0.250" WALL THICKNESS
0.188 = 0.188" WALL THICKNESS
0.250 = 0.250" WALL THICKNESS
E = ROUND TAPERED STEEL TUBE @ 0.14 in/ft TAPER
-18 = 18-SIDED TAPERED STEEL TUBE @ 0.14 in/ft TAPER
DIMENSIONS GIVEN (ACROSS CORNERS) & [ACROSS FLATS]

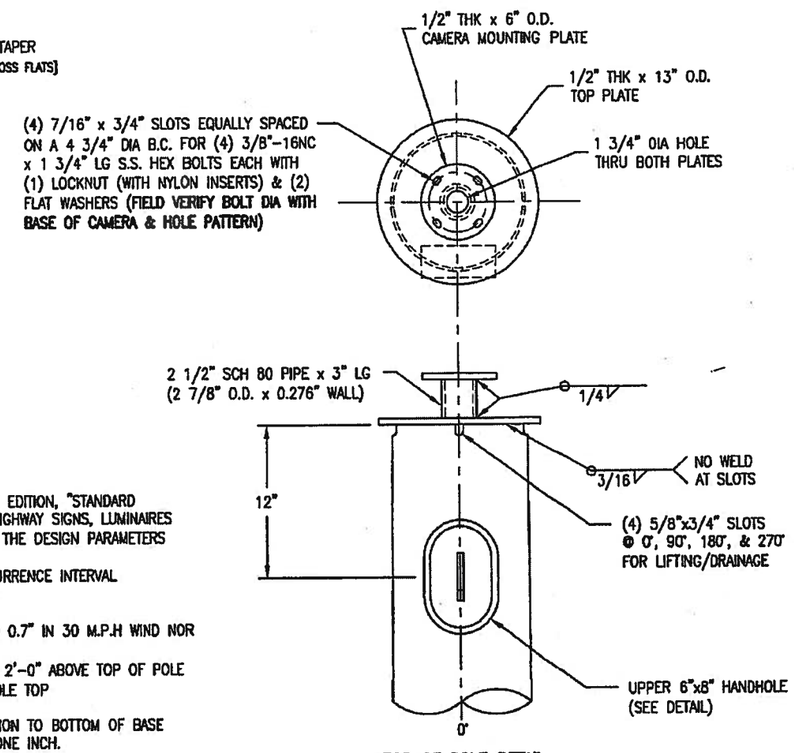

TOP OF POLE DETAIL

NOTE: CONTRACTOR TO VERIFY TOP PLATE, CAMERA MOUNTING PLATE, BOLT CIRCLE, AND BOLT HOLES ARE ADEQUATE FOR THE REQUIRED CAMERA BEFORE RELEASING FOR MANUFACTURING.

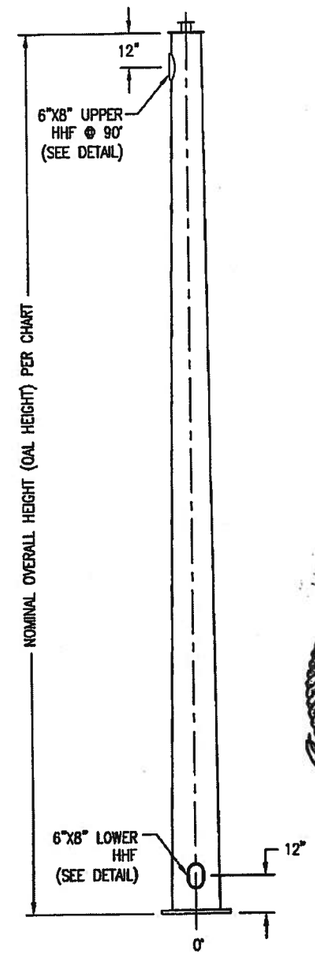

DESIGN CRITERIA:

1. DESIGNED IN ACCORDANCE WITH 2009 AASHTO, 5TH EDITION, "STANDARD SPECIFICATIONS FOR STRUCTURAL SUPPORTS FOR HIGHWAY SIGNS, LUMINAIRES AND TRAFFIC SIGNALS" FOR 90 M.P.H. WIND ZONE. THE DESIGN PARAMETERS INCLUDE:
   50 YEAR STRUCTURE DESIGN LIFE / RECURRENCE INTERVAL
   FATIGUE CATEGORY I CONSIDERATION FOR:
   NATURAL WIND GUST
   POLE DEFLECTION SHALL NEITHER EXCEED 0.7" IN 30 M.P.H WIND NOR 1.4" IN 70 M.P.H. WIND
   LOAD CASE #1:(1) CAMERA = 4 sq ft @ 2'-0" ABOVE TOP OF POLE
   (2) DISH = 12" DIA @ POLE TOP
2. ANCHOR BOLT PROJECTION FROM TOP OF FOUNDATION TO BOTTOM OF BASE PLATE MUST NOT EXCEED ONE NUT HEIGHT PLUS ONE INCH.
3. CUSTOMER TO CONFIRM ALL DIMENSIONS & ORIENTATIONS BEFORE RELEASING ORDER FOR MANUFACTURING.

MATERIAL SPECIFICATIONS	
ROUND TAPERED TUBE	ASTM A595 GR A
18 SIDED TAPERED TUBE	ASTM A572 GR 50 MIN
PLATE	ASTM A36
BAR HANDHOLE FRAME	ASTM A529 GR 50 or ASTM A572 GR 50 or ASTM A709 GR 50
HANDHOLE COVER	ASTM A36 or A1011
ANCHOR BOLTS	ASTM F1554 GR 105
ANCHOR BOLT NUTS	ASTM A563 GR DH
FLAT WASHERS	ASTM F436
PIPE	ASTM A53 GR B, A500 GR B, or A500 GR C
S.S. HARDWARE	AISI-300 SERIES (18-8)
STRUCTURE FINISH	PER SALES ORDER
HARDWARE FINISH	HD GALV TO ASTM A153

STRUCTURAL ENGINEER CLARENCE L. MABIN E-2970 STATE OF NEBRASKA 11/28/12

JOSEPH TONY DAY STATE OF WASHINGTON 11/28/12

APPROVED
Manufacturer's Pole Plan
Approved For Listing As A
Pre-Approved Drawing
WSDOT Bridge & Structures Office
By GB Date 11-29-2012

REV	DESCRIPTION	DATE	DEV BY	CHK BY
R11.1	ADDED A500 GR C PIPE TO MATERIAL SPECS, REMOVED A501 GR A FROM MATERIAL SPECS, REMOVED PREFERRED NOTE TO HHF COVER MATERIAL SPECS.	8/21/12	KJP	SAD
R11	ADDED A500 GR B PIPE TO MATERIAL SPEC'S	9/30/11	EDB	BJR

REVISIONS

STATE: WASHINGTON | REQ# / SO# : DWA-26948-1
PROJECT NAME: WSDOT CAMERA POLES

ROUND TAPERED STEEL CAMERA POLES-LOAD CASE #1
WASHINGTON STATE DEPARTMENT OF TRANSPORTATION

Union Metal Corporation

This document and the contents herein are proprietary and the property of Union Metal Corporation. This document is not to be, copied, reproduced, or used for any reason except for the purposes which it was issued without the express written consent of Union Metal Corporation. Furthermore Union Metal Corporation reserves the right to recall this document and all copies at any time for any reason.

DESIGNED BY	CHECKED BY	DATE	SCALE	ENG REF
LRR	SAD	1/8/09	NTS	P33-B317

P33-B318 | REVISION R11.1 | SHEET 1 OF 2

Hardcopies of this document are considered uncontrolled and are to be used for reference only. Prior to using this document for reference over take all precautions available to ensure that this document matches the current revision maintained in digital format, within but a single source and protected by edit restrictions.