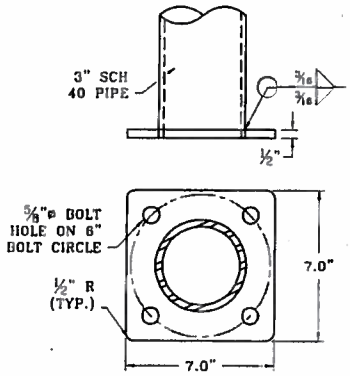


TYPE PPB BREAKAWAY

NOTES:

DESIGN CRITERIA
2009 AASHTO STANDARD SPECIFICATIONS FOR STRUCTURAL SUPPORTS FOR HIGHWAY SIGNS, LUMINAIRES, AND TRAFFIC SIGNALS.
- 90 MPH 3 SECOND GUST
- 50 YEAR DESIGN LIFE/RECURRENCE INTERVAL

GENERAL
- FABRICATION SHALL CONFORM TO 2009 AASHTO STANDARD SPECIFICATIONS FOR STRUCTURAL SUPPORTS FOR HIGHWAY SIGNS, LUMINAIRES, AND TRAFFIC SIGNALS AND AWS D1.1 STRUCTURAL STEEL WELDING CODE.

MATERIALS
- ALL STEEL IN BASE PLATES SHALL CONFORM TO ASTM A572 GR50.
- ANCHOR BOLTS SHALL CONFORM TO ASTM F1554 GR 55.
- NUTS SHALL CONFORM TO ASTM A563 GR DH HEAVY HEX.
- WASHERS SHALL CONFORM TO ASTM F436 TYPE 1.
- ANCHOR PLATE SHALL CONFORM TO ASTM A36.
- GALVANIZING SHALL CONFORM TO ASTM A123 & F2329.
- ALL PIPE SHALL CONFORM TO ASTM A53 GR B, A500, OR A106.
- FASTENERS LESS THEN 1/2" IN DIAMETER SHALL BE STAINLESS STEEL OR BRASS.
- POLE CAPS SHALL BE CAST IRON.

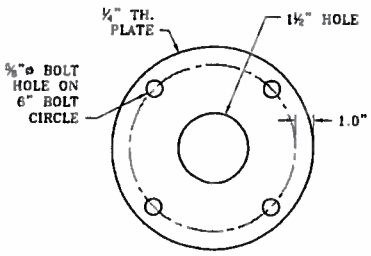


ANCHOR PLATE DETAIL

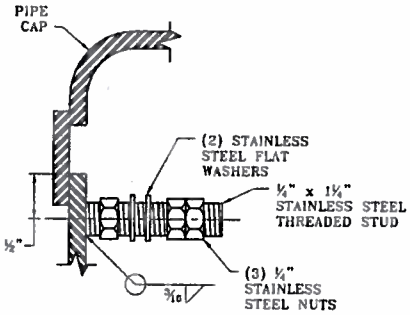


GROUNDING CONNECTION DETAIL

NORTHWEST SIGNAL SUPPLY
DWG. NWS3565

1 1/2" x 3 1/4" ALUMINUM TAG
-(2) 3/16" RIVETS

IDENTIFICATION TAG DETAIL

DANIEL R. EMSLIE
STATE OF WASHINGTON
45829
REGISTERED
PROFESSIONAL ENGINEER
Exp 11/26/13

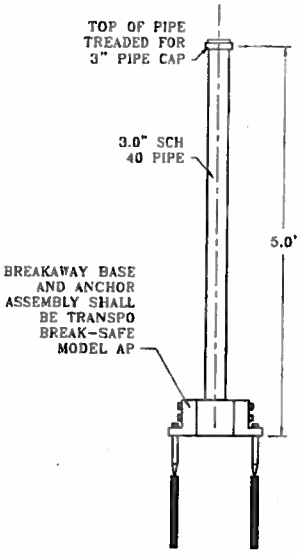


TYPE PPB BREAKAWAY

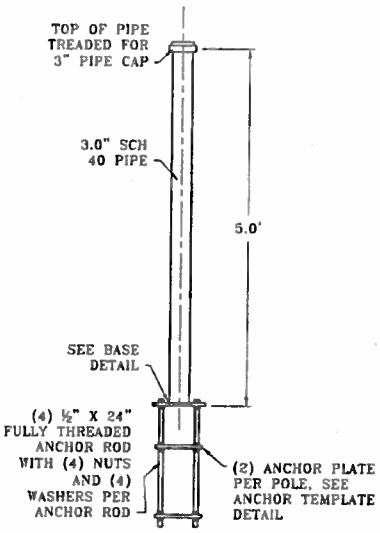


TYPE PPB CURB BASE

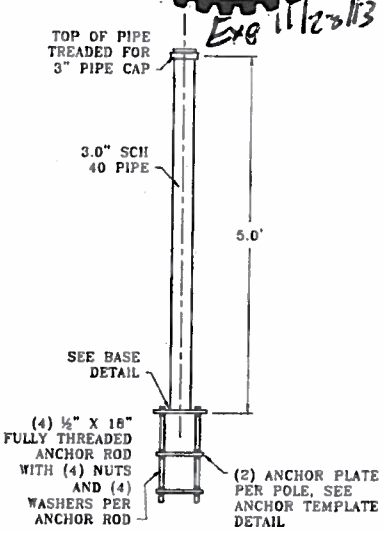


TYPE PPB STANDARD

APPROVED
Manufacturer's Pole Plan
Approved For Listing As A
Pre-Approved Drawing
WSDOT Bridge & Structures Office
By GB Date 10-2-2013

| NO. | REVISION | DATE |
|---|---|---|
| | | |

WSDOT TYPE PPB POST

12965 SW Herman Rd.
Tualatin, OR 97062
PH: 503-635-4351
FX: 503-635-4341
www.nwsignal.com

Northwest Signal
Managing mobility

JOB NUMBER
XXXXXXXX

DRAWING NUMBER
NWS3565

DESIGNED BY:
D. EMSLIE 7/19/13

DRAWING BY:
D. EMSLIE 7/19/13

CHECKED BY:
J. MEUSCH 7/19/13

SHEET 1 OF 1