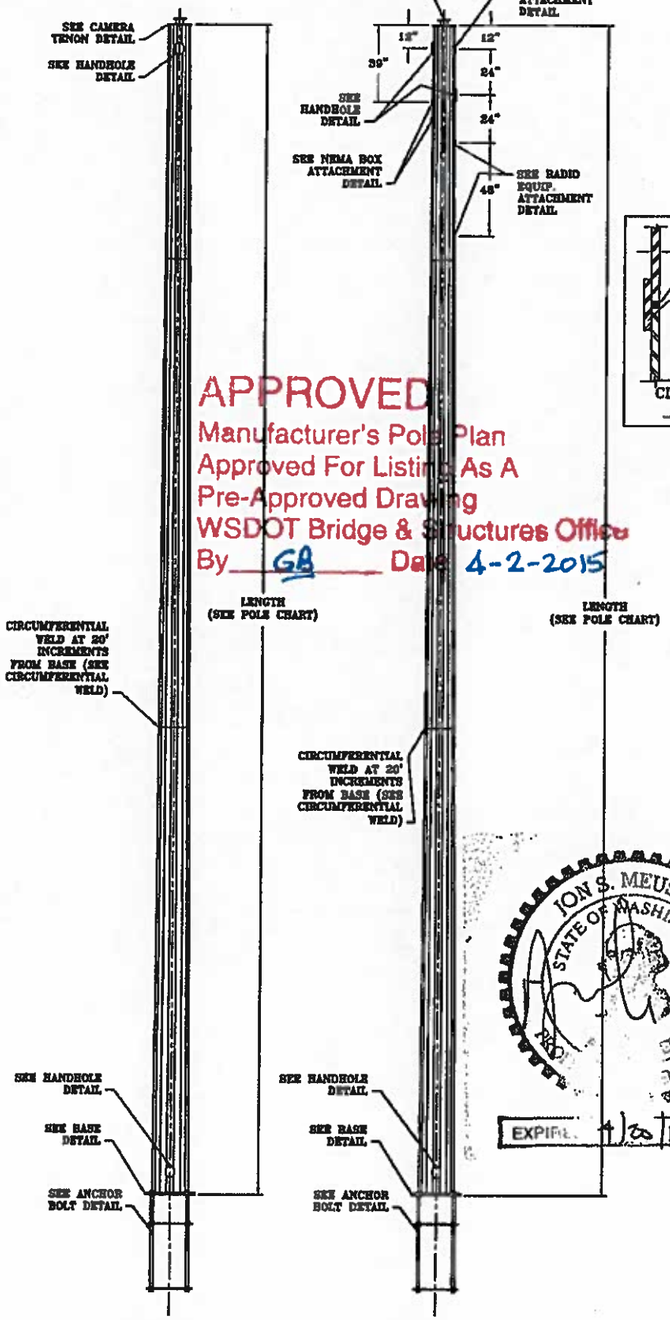

CAMERA POLE LOAD CASE 1

CAMERA POLE LOAD CASE 2

APPROVED
Manufacturer's Pole Plan
Approved For Listing As A
Pre-Approved Drawing
WSDOT Bridge & Structures Office
By GB Date 4-2-2015

JON S. MEUSCH
STATE OF WASHINGTON
REGISTERED PROFESSIONAL ENGINEER

EXPIRES 1/20/16

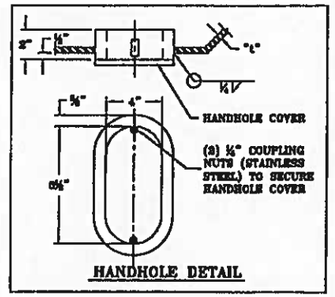

HANDHOLE DETAIL

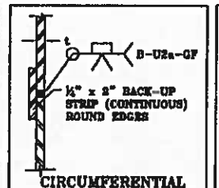

CIRCUMFERENTIAL WELD DETAIL

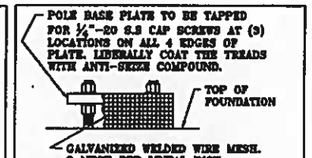

RODENT GUARD

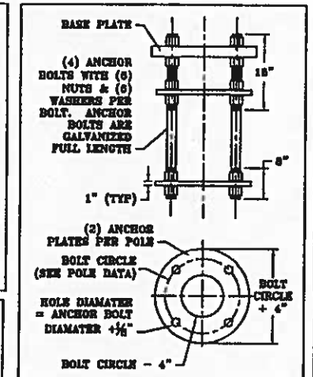

ANCHOR BOLT DETAIL

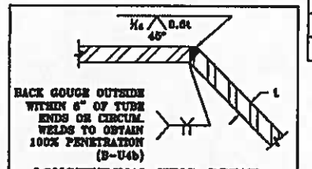

LONGITUDINAL WELD DETAIL
TWO PER TUBE, @ 180 DEGREES

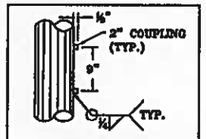

NEMA BOX ATTACHMENT DETAIL

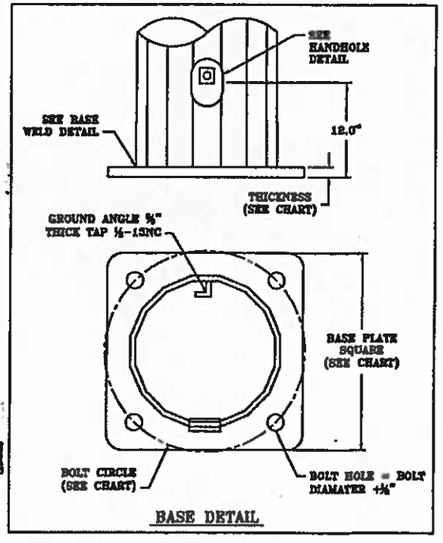

BASE DETAIL

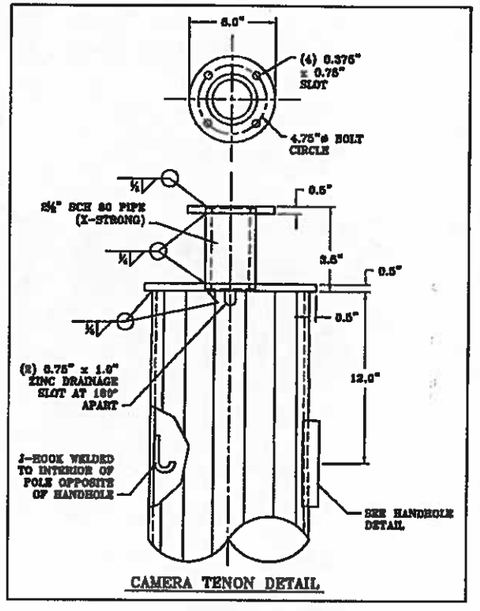

CAMERA TENON DETAIL

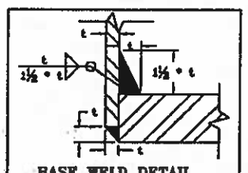

BASE WELD DETAIL

RADIO ATTACHMENT DETAIL

DATA CHART

POLE QTY.	POLE DESIGNATION	LOAD CASE	SHAFT LENGTH (FT)	POLE DATA: BASE DIAMETER (IN)	POLE DATA: TOP DIAMETER (IN)	POLE DATA: THICK-NESS (IN)	BASE PLATE: BASE PLATE SQUARE (IN)	BASE PLATE: BOLT CIRCLE (IN)	BASE PLATE: THICK-NESS (IN)	ANCHOR BOLT: DIAMETER (IN)	ANCHOR BOLT: LENGTH (IN)
	CCTV20-1	1*	20.0	11.75	9.0	0.1875	25.0	25.5	1.25	1.25	52.0
	CCTV25-1	1*	25.0	12.5	9.0	0.1875	25.0	25.5	1.25	1.25	52.0
	CCTV30-1	1*	30.0	13.25	9.0	0.1875	25.0	25.5	1.25	1.25	52.0
	CCTV35-1	1*	35.0	14.0	9.0	0.1875	25.0	25.5	1.25	1.25	62.0
	CCTV40-1	1*	40.0	15.0	9.4	0.1875	25.0	25.5	1.25	1.25	52.0
	CCTV45-1	1*	45.0	15.5	9.2	0.25	25.0	25.5	1.25	1.25	52.0
	CCTV50-1	1*	50.0	16.0	11.0	0.25	25.0	25.5	1.25	1.25	52.0

*LOAD CASE 1 CAMERA POLES MOUNTED ON UP TO 30' ELEVATED BRIDGE MEET DEFLECTION DESIGN CRITERIA

	CCTV20-2	2	20.0	11.75	9.0	0.1875	25.0	25.5	1.25	1.25	52.0
	CCTV25-2	2	25.0	12.5	9.0	0.1875	25.0	25.5	1.25	1.25	52.0
	CCTV30-2	2	30.0	13.25	9.0	0.1875	25.0	25.5	1.25	1.25	52.0
	CCTV35-2	2	35.0	14.0	9.0	0.1875	25.0	25.5	1.25	1.25	62.0
	CCTV40-2	2	40.0	15.0	9.4	0.25	25.0	25.5	1.25	1.25	52.0
	CCTV45-2	2	45.0	16.5	10.2	0.25	25.0	25.5	1.25	1.25	52.0
	CCTV50-2	2	50.0	18.0	11.0	0.3125	25.0	25.5	1.25	1.25	62.0

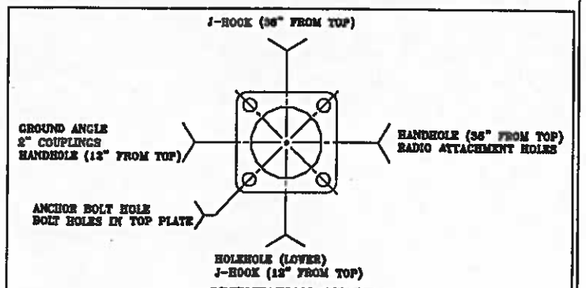

ORIENTATION CHART
LOAD CASE 2 ONLY

NOTES:

DESIGN CRITERIA
2013 AASHTO STANDARD SPECIFICATIONS FOR STRUCTURAL SUPPORTS FOR HIGHWAY SIGNS, LUMINAIRES, AND TRAFFIC SIGNALS.
- 90 MPH 3 SECOND GUST
- 50 YEAR DESIGN LIFE/RECURRENCE INTERVAL
- MAXIMUM POLE DEFLECTION SHALL NOT EXCEED 0.7" IN 50 MPH WIND, 0.8" IN 55 MPH WIND, & 1.4" IN 70 MPH WIND.
- LOAD CASE 1: CAMERA = 4' SQ FT AT 2'-0" ABOVE POLE TOP, 85 LBS.
  DISH = 18" DIA. AT TOP OF POLE, 75 LBS.
- LOAD CASE 2: CAMERA = 4' SQ FT AT 2'-0" ABOVE POLE TOP, 85 LBS.
  SIDE CAMERA = 0.54 SQ FT AT 1'-0" BELOW TOP OF POLE, 10 LBS.
  SIDE CAMERA = 0.54 SQ FT AT 2'-0" BELOW TOP OF POLE, 10 LBS.
  NEMA CABINET = 1.33 SQ FT AT 3'-0" BELOW TOP OF POLE, 45 LBS
  RADIO EQUIP = 2.25 SQ FT AT 2'-0" BELOW TOP OF POLE, 10 LBS
  RADIO EQUIP = 2.25 SQ FT AT 9'-0" BELOW TOP OF POLE, 10 LBS

GENERAL
- POLE SHALL BE HEXADECAGONAL IN CROSS SECTION. POLE SHAFT SHALL HAVE TAPER OF 0.14 IN/FT.
- FABRICATION SHALL CONFORM TO 2008 AASHTO STANDARD SPECIFICATIONS FOR STRUCTURAL SUPPORTS FOR HIGHWAY SIGNS, LUMINAIRES, AND TRAFFIC SIGNALS AND AWS D1.1 STRUCTURAL STEEL WELDING CODE.
- LONGITUDINAL SEAM WELD IS 60% MIN. PENETRATION EXPECT FOR 6 INCHES FROM END OF SECTION AT FLANGE, BASE PLATE AND SLIP JOINT IS 100% PENETRATION.

MATERIALS
- ALL STEEL IN TUBES, BASE PLATES, CAMERA MOUNTING PLATE & HANDHOLE FRAMES SHALL CONFORM TO ASTM A572 GR50.
- ANCHOR BOLTS SHALL CONFORM TO ASTM F1554 GR 105, NUTS SHALL CONFORM TO ASTM A563 GR DH HEAVY HEX, WASHERS SHALL CONFORM TO ASTM F436 TYPE 1.
- ANCHOR PLATE SHALL CONFORM TO ASTM A36.
- GALVANIZING SHALL CONFORM TO ASTM A123 & A153.
- HANDHOLE COVERS SHALL CONFORM TO ASTM A1011 GR50.
- ALL PIPE SHALL CONFORM TO ASTM A53 GR B.

NO.	REVISION	DATE
1	UPDATED TO AASHTO 2009, NEW BORDER, ADDED LOAD CASE 2	4/11
2	UPDATED TO AASHTO 2013	7/13
3	ADDED BRIDGE ELBOW NOTE FOR CASE 1	3/15

WSDOT CAMERA POLE

12965 SW Herman Rd.
Tualatin, OR 97062
PH: 503-635-4351
FX: 503-635-4341
www.nwsignal.com

JOB NUMBER

Northwest Signal Inc.
Managing mobility

DRAWING NUMBER: NWS3545
DESIGNED BY: D. EMSLIE 10/27/09
DRAWING BY: D. EMSLIE 10/27/09
CHECKED BY: J. MEUSCH 10/27/09
SHEET 1 OF 1