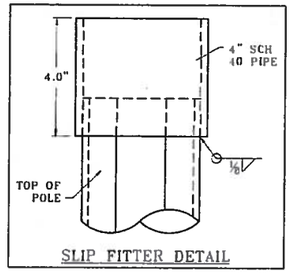

SLIP FITTER DETAIL

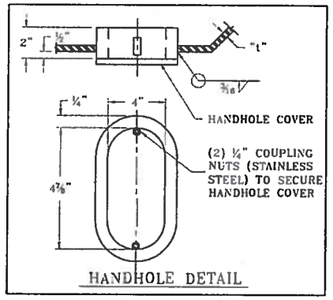

HANDHOLE DETAIL

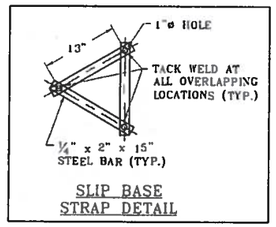

SLIP BASE STRAP DETAIL

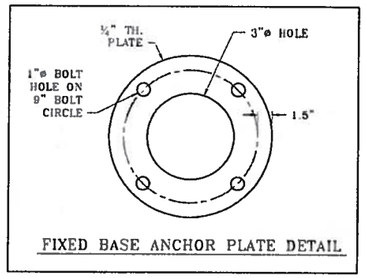

FIXED BASE ANCHOR PLATE DETAIL

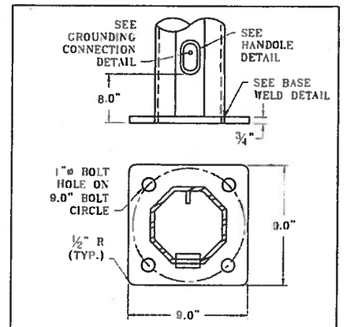

FIXED POLE BASE DETAIL

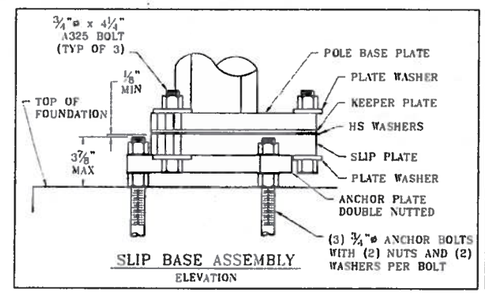

SLIP BASE ASSEMBLY
ELEVATION

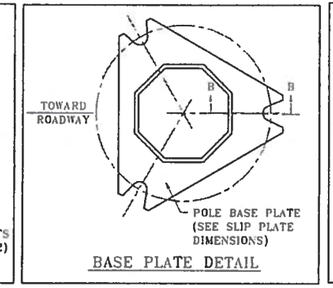

BASE PLATE DETAIL

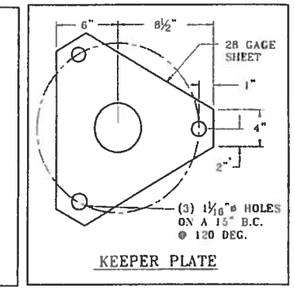

KEEPER PLATE

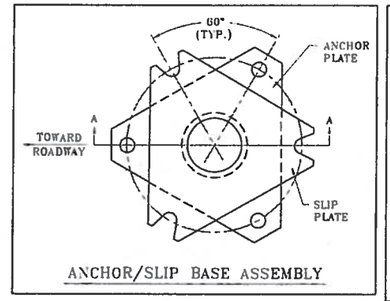

ANCHOR/SLIP BASE ASSEMBLY

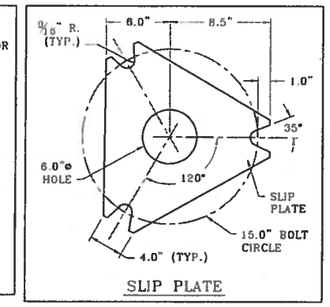

SLIP PLATE

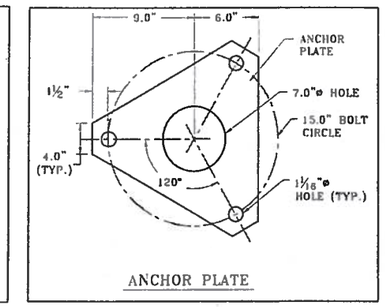

ANCHOR PLATE

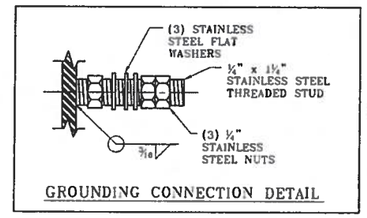

GROUNDING CONNECTION DETAIL

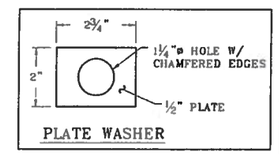

PLATE WASHER

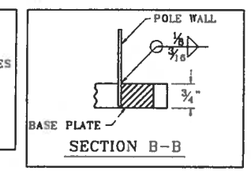

SECTION B–B

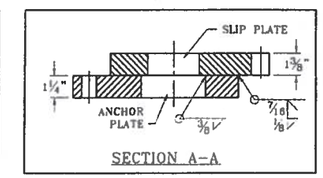

SECTION A–A

POLE DATA				
POLE DESIGNATION	BASE DIA (IN)	TOP DIA (IN)	THICK-NESS (IN)	ANCHOR BOLT (IN)
TYPE PS	5.125	4.0	0.1875	¾"ø x 30"
TYPE 1	5.5	4.0	0.1875	¾"ø x 30"
TYPE RM	5.5	4.0	0.1875	¾"ø x 30"
TYPE FB	6.0	4.0	0.1875	¾"ø x 30"

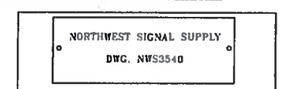

IDENTIFICATION TAG DETAIL

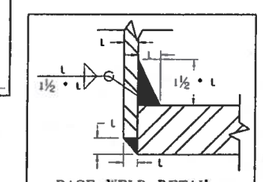

BASE WELD DETAIL

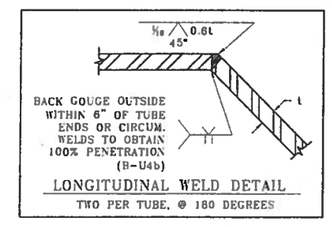

LONGITUDINAL WELD DETAIL
TWO PER TUBE, @ 180 DEGREES

NOTES:

DESIGN CRITERIA
2009 AASHTO STANDARD SPECIFICATIONS FOR STRUCTURAL SUPPORTS FOR HIGHWAY SIGNS, LUMINAIRES, AND TRAFFIC SIGNALS.
- 90 MPH 3 SECOND GUST
- 50 YEAR DESIGN LIFE/RECURRENCE INTERVAL

GENERAL
- POLE SHALL BE OCTAGONAL IN CROSS SECTION. POLE SHAFT SHALL HAVE TAPER OF 0.14 IN/FT.
- FABRICATION SHALL CONFORM TO 2009 AASHTO STANDARD SPECIFICATIONS FOR STRUCTURAL SUPPORTS FOR HIGHWAY SIGNS, LUMINAIRES, AND TRAFFIC SIGNALS AND AWS D1.1 STRUCTURAL STEEL WELDING CODE.
- LONGITUDINAL SEAM WELD IS 60% MIN. PENETRATION EXPECT FOR 6 INCHES FROM END OF SECTION AT FLANGE, BASE PLATE AND SLIP JOINT IS 100% PENETRATION.

MATERIALS
- ALL STEEL IN TUBES AND BASE PLATES SHALL CONFORM TO ASTM A572 GR50.
- ANCHOR BOLTS SHALL CONFORM TO ASTM F1554 GR 55.
- NUTS SHALL CONFORM TO ASTM A563 GR DH HEAVY HEX.
- WASHERS SHALL CONFORM TO ASTM F436 TYPE 1.
- CONNECTION BOLTS SHALL CONFORM TO ASTM A325.
- GALVANIZING SHALL CONFORM TO ASTM A123 & F2329.
- ANCHOR PLATES AND STRAPS SHALL CONFORM TO ASTM A36.
- HANDHOLE FRAMES SHALL CONFROM TO ASTM A53.
- HANDHOLE COVERS SHALL CONFORM TO ASTM A1011.
- ALL PIPE SHALL CONFORM TO ASTM A53 GR B, A500, OR A106.
- FASTENERS LESS THEN ½" IN DIAMETER SHALL BE STAINLESS STEEL OR BRASS.

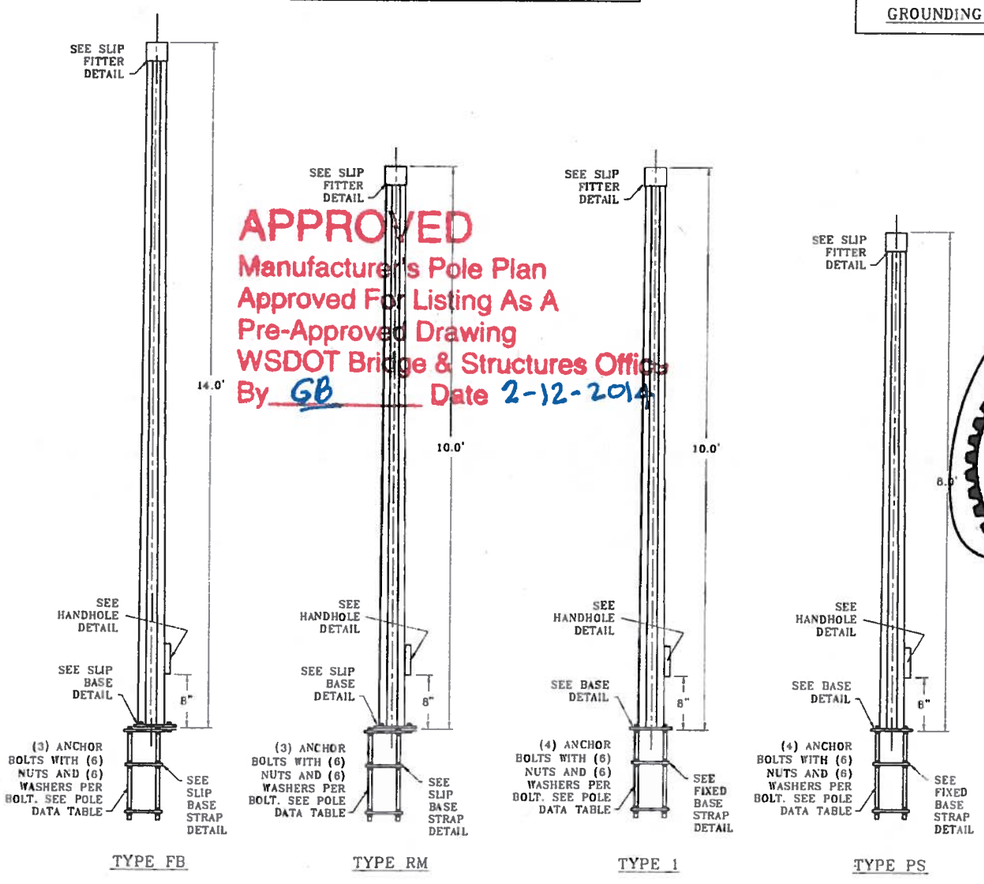

TYPE FB TYPE RM TYPE 1 TYPE PS

APPROVED
Manufacturer's Pole Plan
Approved For Listing As A
Pre-Approved Drawing
WSDOT Bridge & Structures Office
By GB Date 2-12-2014

DANIEL R EMSLIE
STATE OF WASHINGTON
45329
REGISTERED
PROFESSIONAL ENGINEER
11/28/15
Exp

POLE SCHEDULE		
QUANTITY	POLE DESIGNATION	BASE TYPE

NO.	REVISION	DATE
1	UPDATED FOR AASHTO 2001	4/03
2	UPDATED TO AASHTO 2009, NEW BOARDER, MINOR DESIGN CHANGES	3/11
3	ADDED GROUNDING LUG, REMOVED PPB POST	7/13
4	INCREASED BASE PLATE THICKNESS	2/14

WSDOT TYPE PS, TYPE 1, TYPE RM, & TYPE FB POST

12965 SW Herman Rd.
Tualatin, OR 97062
PH: 503-635-4351
FX: 503-635-4341
www.nwsignal.com

Northwest Signal
Managing mobility

JOB NUMBER
-

DRAWING NUMBER
NWS3540

DESIGNED BY:
D. EMSLIE 6/25/08

DRAWING BY:
D. EMSLIE 6/25/08

CHECKED BY:
J. MEUSCH 6/27/08

SHEET 1 OF 1