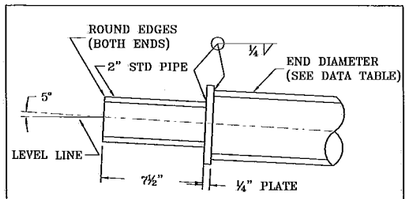

TENON DETAIL (LUMINAIRE ARM)

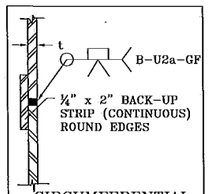

CIRCUMFERENTIAL WELD DETAIL

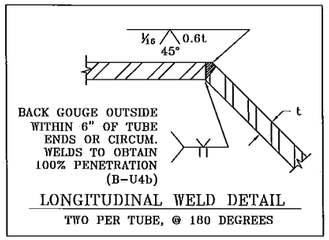

LONGITUDINAL WELD DETAIL

TWO PER TUBE, @ 180 DEGREES

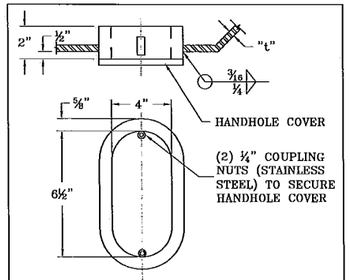

HANDHOLE DETAIL

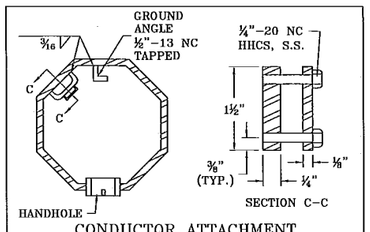

CONDUCTOR ATTACHMENT BRACKET DETAIL

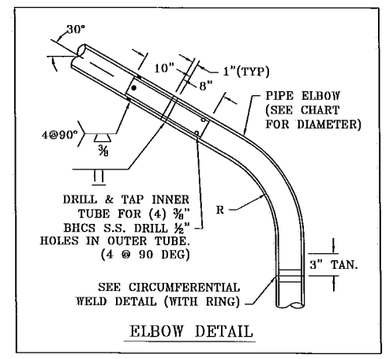

ELBOW DETAIL

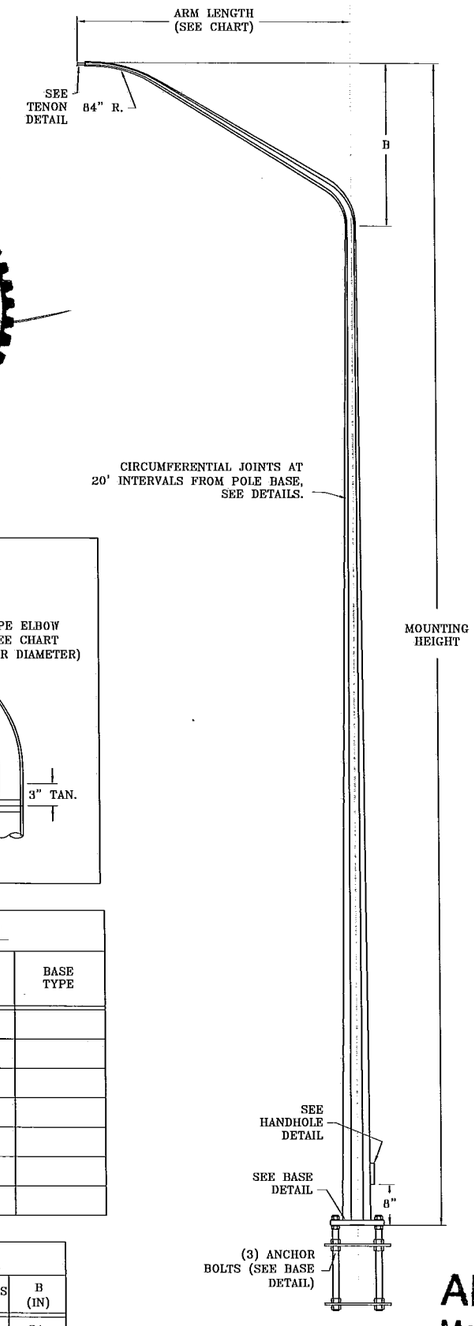

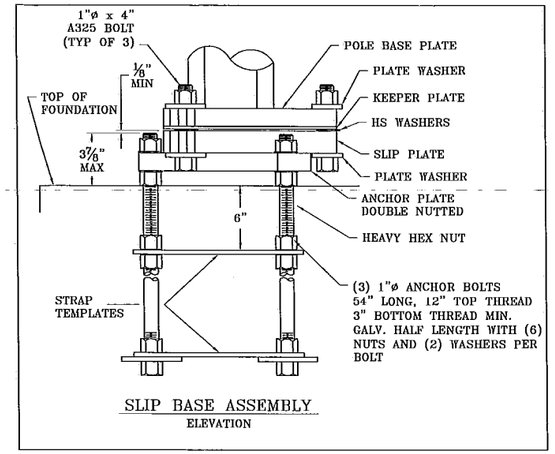

SLIP BASE ASSEMBLY

ELEVATION

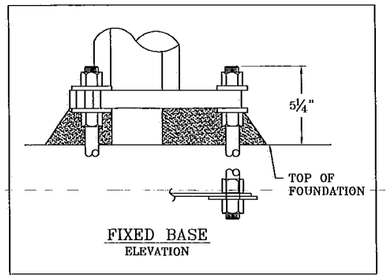

FIXED BASE

ELEVATION

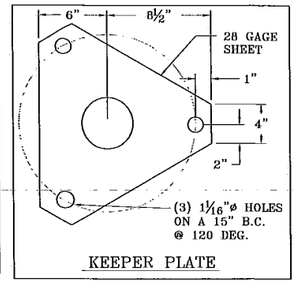

KEEPER PLATE

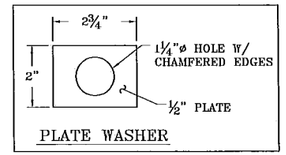

PLATE WASHER

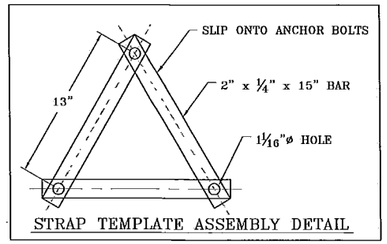

STRAP TEMPLATE ASSEMBLY DETAIL

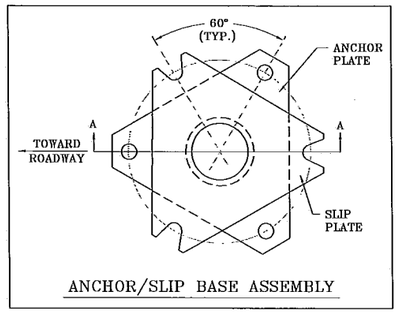

ANCHOR/SLIP BASE ASSEMBLY

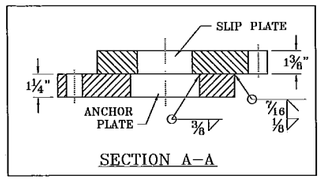

SECTION A-A

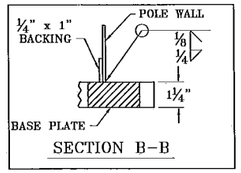

SECTION B-B

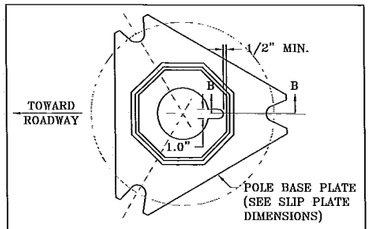

BASE PLATE DETAIL

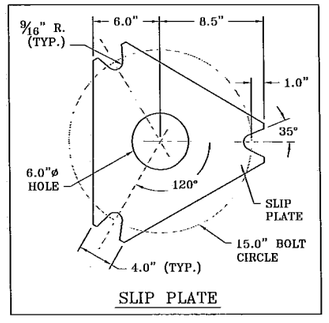

SLIP PLATE

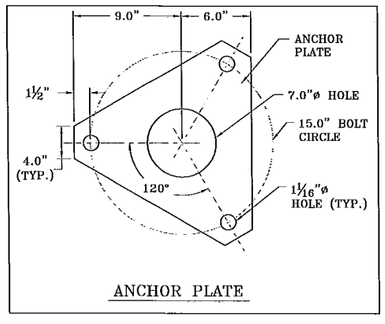

ANCHOR PLATE

NOTES:

DESIGN CRITERIA
2009 AASHTO STANDARD SPECIFICATIONS FOR STRUCTURAL SUPPORTS FOR HIGHWAY SIGNS, LUMINAIRES, AND TRAFFIC SIGNALS.
- 90 MPH 3 SECOND GUST
- 50 YEAR DESIGN LIFE/RECURRENCE INTERVAL
- FATIGUE CATEGORY III

CAFL AT CRITICAL CONNECTIONS
- POLE TO BASE PLATE CONNECTION = E
- LUMINAIRE SLIP FIT CONNECTION = B
- POLE SHAFT = B'

LOADING
- LUMINAIRE, FACE AREA = 3.3 SQ FT, WEIGHT = 60 LBS.
- SIGN, FACE AREA = 20 SQ FT AT 7'-0" ABOVE POLE BASE.

GENERAL
- POLE AND LUMINAIRE ARMS SHALL BE OCTAGONAL IN CROSS SECTION. POLE SHAFT SHALL HAVE TAPER OF 0.14 IN/FT.
- FABRICATION SHALL CONFORM TO 2009 AASHTO STANDARD SPECIFICATIONS FOR STRUCTURAL SUPPORTS FOR HIGHWAY SIGNS, LUMINAIRES, AND TRAFFIC SIGNALS AND AWS D1.1 STRUCTURAL STEEL WELDING CODE.
- LONGITUDINAL SEAM WELD IS 60% MIN. PENETRATION EXPECT FOR 6 INCHES FROM END OF SECTION AT FLANGE, BASE PLATE AND SLIP JOINT IS 100% PENETRATION.

MATERIALS
- ALL STEEL IN TUBES, BASE PLATES, FLANGE PLATES, GUSSET PLATES & HANDHOLE FRAMES SHALL CONFORM TO ASTM A572 GR50.
- ANCHOR BOLTS SHALL CONFORM TO ASTM F1554 GR 105, NUTS SHALL CONFORM TO ASTM A563 GR DH HEAVY HEX, WASHERS SHALL CONFORM TO ASTM F436 TYPE I.
- ANCHOR PLATE SHALL CONFORM TO ASTM A36.
- CONNECTION BOLTS SHALL CONFORM TO ASTM A325, NUTS SHALL CONFORM TO ASTM A563 GR DH HEAVY HEX, WASHERS SHALL CONFORM TO ASTM F436 TYPE I.
- GALVANIZING SHALL CONFORM TO ASTM A123 & A153.
- HANDHOLE COVERS SHALL CONFORM TO ASTM A1011 GR50.
- ALL PIPE TENONS AND WIRE GUIDES SHALL CONFORM TO ASTM A53 GR B.
- FASTENERS LESS THEN ½" IN DIAMETER SHALL BE STAINLESS STEEL OR BRASS.
- PLATE WASHERS SHALL CONFORM TO ASTM A36.
- KEEPER PLATE SHALL CONFORM TO ASTM A653 COATING DESIGNATION G 90.

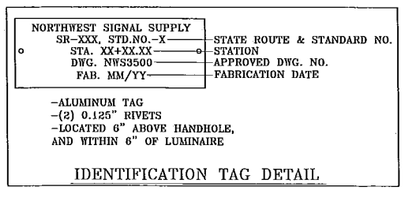

IDENTIFICATION TAG DETAIL

DANIEL R EMSLIE
STATE OF WASHINGTON
45529
REGISTERED
PROFESSIONAL ENGINEER
Exp 11/29/11

POLE SCHEDULE

POLE NUMBER	MOUNTING HEIGHT (FT)	ARM LENGTH (FT)	BASE TYPE

POLE DATA

MOUNTING HEIGHT (FT)	BASE DIAMETER (IN)	TOP DIAMETER (IN)	THICKNESS (IN)	TOTAL LENGTH (FT)
25.0	7.38	5.0	.188	17.0
30.0	8.08	5.0	.188	22.0
35.0	8.78	5.0	.188	27.0
40.0	9.48	5.0	.188	32.0
45.0	10.18	5.0	.188	37.0
50.0	10.88	5.0	.188	42.0

LUMINAIRE ARM DATA

ARM LENGTH (FT)	ELBOW DIAMETER (IN)(1)	R (IN)	THICKNESS (IN)	B (IN)
6	4	12	.188	24
8	4	12	.188	36
10	4	12	.188	51
12	4	12	.188	65
14	4	12	.188	79
16	4	12	.188	93

(1) ELBOWS TO BE MADE FROM STD PIPE

APPROVED
Manufacturer's Pole Plan
Approved For Listing As A
Pre-Approved Drawing
WSDOT Bridge & Structures Office
By GB Date 4-20-2011

NO.	REVISION	DATE
1	UPDATED FOR AASHTO 2001	4/03
2	UPDATED TO AASHTO 2009, NEW BOARDER, MINOR DESIGN CHANGES	3/11

WSDOT LIGHT POLE STANDARD J-1
WITH TYPE II LUMINAIRE ARM

12965 SW Herman Rd.
Tualatin, OR 97062
PH: 503-635-4351
FX: 503-635-4341
www.nwsignal.com

Northwest Signal
Managing mobility

JOB NUMBER
XXXXXX

DRAWING NUMBER
NWS3515

DESIGNED BY:
D. EMSLIE 6/10/08

DRAWING BY:
D. EMSLIE 6/11/08

CHECKED BY:
J. MEUSCH 6/27/08

SHEET 1 OF 1