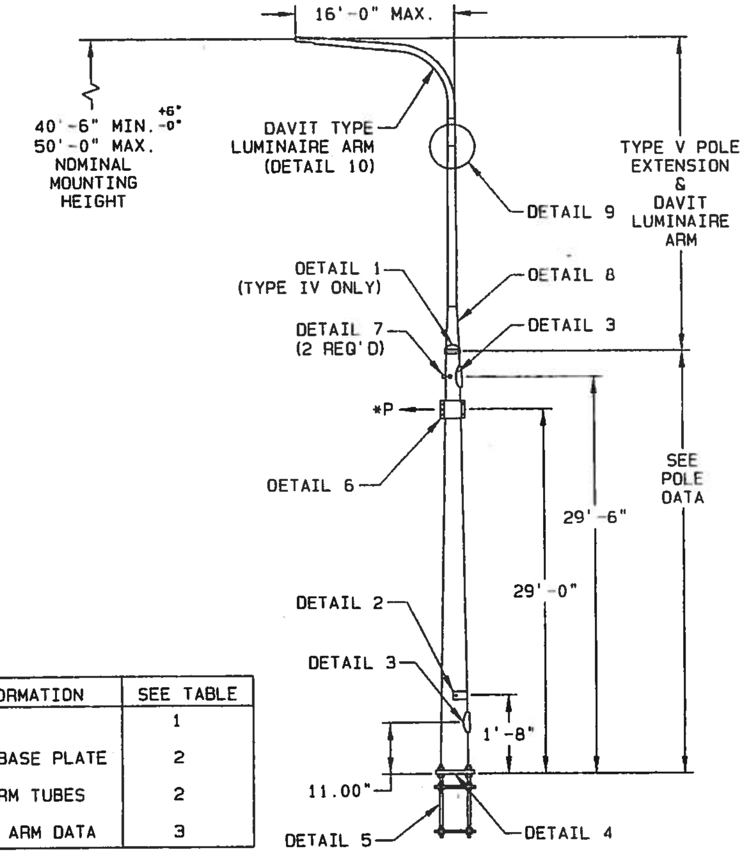

FOR THIS INFORMATION	SEE TABLE
MATERIAL DATA	1
ANCHOR BOLTS & BASE PLATE	2
POLE & SIGNAL ARM TUBES	2
DAVIT LUMINAIRE ARM DATA	3

WASHINGTON STRAIN POLE

TABLE 2: POLE DATA

QTY.	POLE TYPE	POLE CLASS	POLE TUBE: BASE DIA. (IN)	POLE TUBE: TOP DIA. (IN)	POLE TUBE: LENGTH (FT)	POLE TUBE: GAUGE OR THK. (IN)	POLE BASE: SQUARE "S" (IN)	POLE BASE: BOLT CIRCLE "Y" (IN)	POLE BASE: THK. "M" (IN)	POLE BASE: HOLE "Z" (IN)	ANCHOR BOLT: DIA. "K" (IN)	ANCHOR BOLT: LENGTH "J" (IN)	ANCHOR BOLT: THREAD LENGTH "U" (IN)	ANCHOR PLATE O.D. (IN)	LUMINAIRE ARM LENGTH (FT)
	TYPE IV	1900#	11.00	6.80	30.00	0.239	15.00	15.00	1.500	1.50	1.25	60.00	18.00	19.00	N/A
	TYPE IV	2700#	12.50	8.30	30.00	0.239	17.00	17.00	1.500	1.75	1.50	60.00	18.00	21.00	N/A
	TYPE IV	3700#	14.00	9.80	30.00	0.250	19.00	19.00	1.500	1.75	1.50	60.00	18.00	23.00	N/A
	TYPE IV	4800#	14.00	9.80	30.00	0.313	20.00	20.00	1.750	2.00	1.75	60.00	18.00	24.00	N/A
	TYPE IV	5600#	15.00	10.80	30.00	0.313	20.00	20.00	1.750	2.00	1.75	60.00	18.00	24.00	N/A
	TYPE IV	6300#	16.00	11.80	30.00	0.313	22.00	22.00	1.750	2.00	1.75	60.00	18.00	26.00	N/A
	TYPE IV	7200#	17.00	12.80	30.00	0.313	22.00	22.00	1.750	2.00	1.75	60.00	18.00	26.00	N/A
	TYPE V	1900#	11.00	6.80	30.00	0.239	15.00	15.00	1.500	1.50	1.25	60.00	18.00	19.00	6' - 16' SPAN
	TYPE V	2700#	12.50	8.30	30.00	0.239	17.00	17.00	1.500	1.75	1.50	60.00	18.00	21.00	6' - 16' SPAN
	TYPE V	3700#	14.00	9.80	30.00	0.250	19.00	19.00	1.500	1.75	1.50	60.00	18.00	23.00	6' - 16' SPAN
	TYPE V	4800#	14.00	9.80	30.00	0.313	20.00	20.00	1.750	2.00	1.75	60.00	18.00	24.00	6' - 16' SPAN
	TYPE V	5600#	15.00	10.80	30.00	0.313	20.00	20.00	1.750	2.00	1.75	60.00	18.00	24.00	6' - 16' SPAN
	TYPE V	6300#	16.00	11.80	30.00	0.313	22.00	22.00	1.750	2.00	1.75	60.00	18.00	26.00	6' - 16' SPAN
	TYPE V	7200#	17.00	12.80	30.00	0.313	22.00	22.00	1.750	2.00	1.75	60.00	18.00	26.00	6' - 16' SPAN

TABLE 1: MATERIAL DATA

COMPONENT	DESIGNATION	MIN. YIELD (KSI)
TAPERED TUBES	A595 GR. A OR A572	55
REDUCING CONE	A595 GR. A	55
BASE PLATE	A572 GR. 50	50
HANDHOLE RIM	A500 GR. B OR C A513 GR. 1035 OR 1040 *WITH FURTHER RESTRICTION ON MINIMUM YIELD STRENGTH HELD TO 50 KSI.	50* 50
ANCHOR BOLTS NUTS WASHERS	F 1554 ASTM A563 GR.DH ASTM F436	105 -- --
GALVANIZING - STRUCTURE	A123	--
GALVANIZING - HARDWARE	F2329	--

PLEASE PROVIDE ID TAG STAMPING INFORMATION

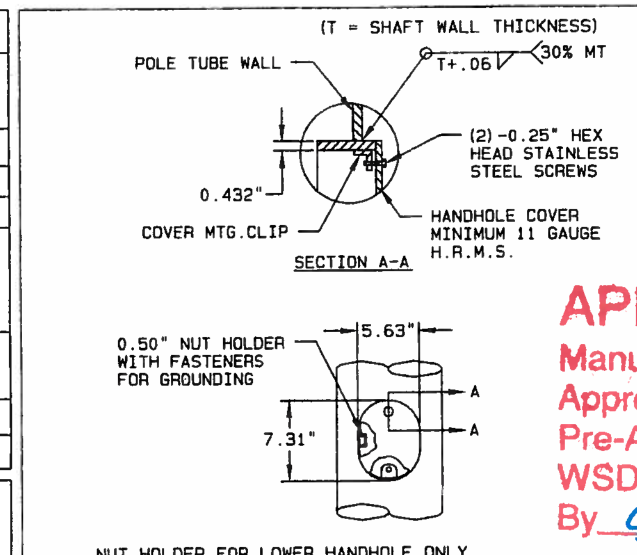

DETAIL 3 HANDHOLE

DESIGN CRITERIA:
2009 AASHTO STANDARD SPECIFICATION FOR STRUCTURAL SUPPORTS FOR HIGHWAY SIGNS, LUMINAIRES, AND TRAFFIC SIGNALS.
-50 YEAR DESIGN LIFE/RECURRENCE INTERVAL

WIND VELOCITY:
90 MPH ISOTACH.

LONGITUDINAL WELD SEAM:
WELDING PROCESS:
HYBRID LBW/GMAW. (POLE SHAFT (0.2500, 3 GA. & 0.3125)
HIGH FREQUENCY ELECTRIC RESISTANCE WELD. (POLE SHAFT (11 GA.)

WELD INSPECTION:
ALL LONGITUDINAL SEAM WELDS SHALL BE INSPECTED BY MAGNETIC PARTICLE METHOD FOR 30% OF LENGTH EXCEPT FOR SHAFT THICKNESS OVER 0.3125 TO BE ULTRASONIC METHOD.

WELDING:
WELDING OF STRUCTURES SHALL BE IN ACCORDANCE WITH LATEST OF THE AWS STRUCTURAL WELDING CODE D1.1-STEEL. LONGITUDINAL SEAM WELD IS 60% MINIMUM PENETRATION EXCEPT 100% PENETRATION FOR 6 INCHES FROM END OF SECTION AT BASEPLATE. SLIP JOINTS SHALL BE A MINIMUM OF 1.5 X FEMALE SECTION DIA + 6 INCHES.

LOADING INFORMATION

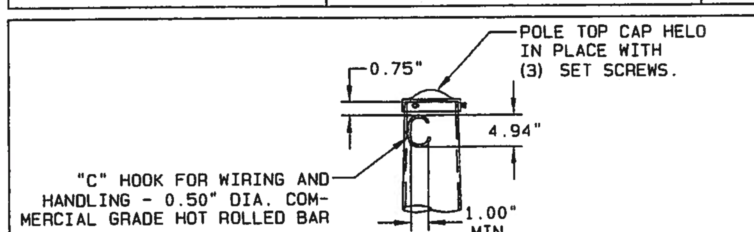

DETAIL 1 POLE TOP CAP - TYPE IV ONLY

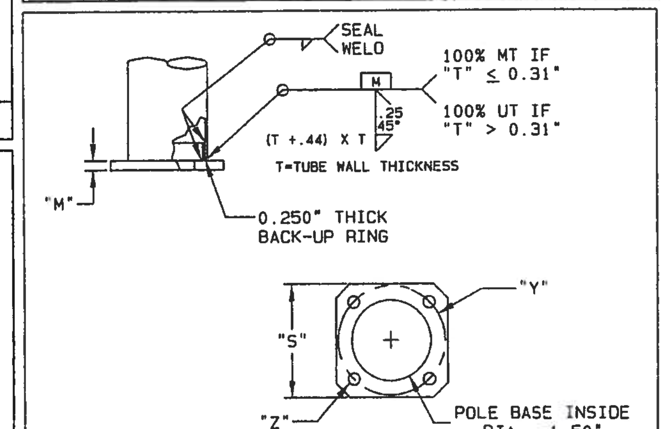

DETAIL 4 POLE BASE

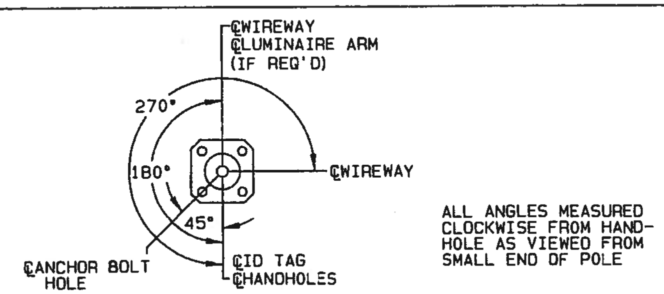

RADIAL INDEX

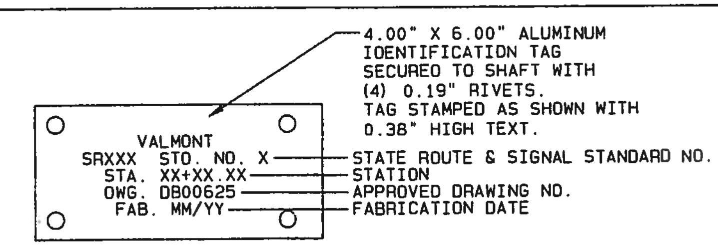

POLE SHAFT: LOCATED AS SHOWN ON PAGE 1 OF 3.
LUMINAIRE ARM: LOCATED AS SHOWN ON DETAILS 12 & 13, PAGE 3 OF 3.

DETAIL 2 IDENTIFICATION TAG

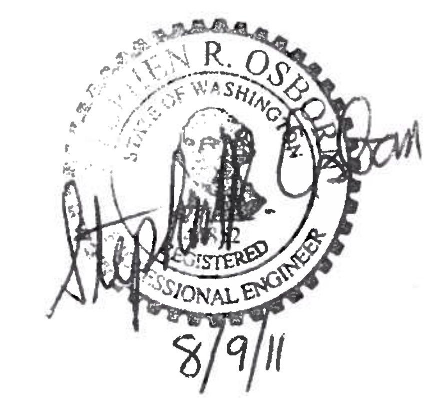

REV	DRAWN BY-DATE	CHECK BY-DATE	DESCRIPTION
A	BOB3 07/22/11	BOB3 07/22/11	ADDED HANGING DETAIL / HLAW WELD NOTES
—	BOB3 06/03/11	BOB3 06/03/11	— — — — — — — — — —

TITLE STATE OF WASHINGTON STRAIN POLE STRUCTURES

VALMONT INDUSTRIES, INC. RESERVES THE RIGHT TO INSTALL VARIOUS ENGINEER APPROVED, MATERIAL HANGING ACCOMMODATIONS TO FACILITATE THE MANUFACTURING PROCESS.

valmont
Valley, NE 68064
(402) 359-2201

PAGE NUMBER: 1 OF 2
DRAWING NUMBER DB00885 REV A