LOADING INFORMATION:
TOTAL EPA: 5.30 SQ/FT
TOTAL WEIGHT: 163 LBS.

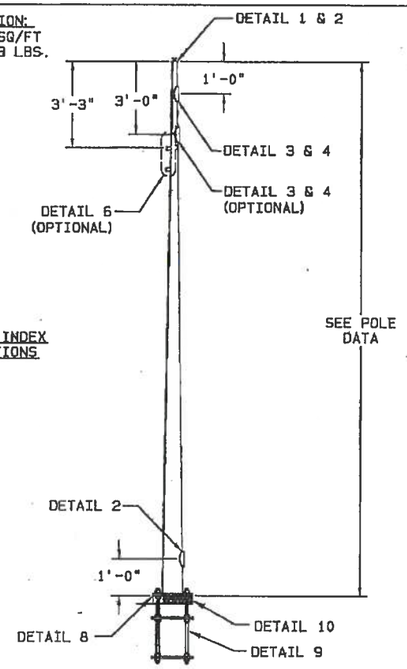

LOAD CASE #1

LOADING INFORMATION:
TOTAL EPA: 10.91 SQ/FT
TOTAL WEIGHT: 215 LBS.

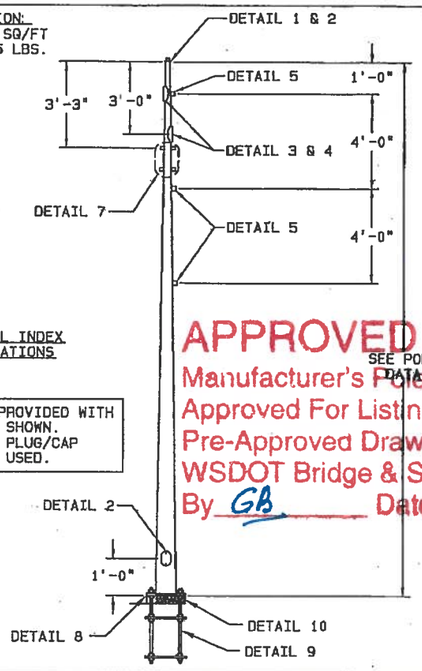

LOAD CASE #2 PROVIDED WITH ALL EQUIPMENT SHOWN. CONTRACTOR TO PLUG/CAP COUPLINGS NOT USED.

APPROVED
Manufacturer's Pole Plan
Approved For Listing As A
Pre-Approved Drawing
WSDOT Bridge & Structures Office
By GB Date 4-15-2015

LOADING INFORMATION:
TOTAL EPA: 5.30 SQ/FT
TOTAL WEIGHT: 163 LBS.

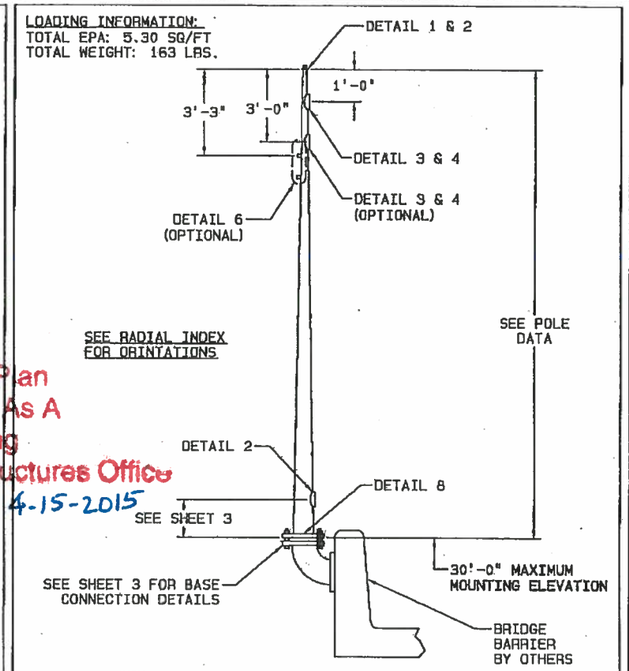

LOAD CASE #1 ON BRIDGE ELBOW

DESIGN CRITERIA:
2009 AASHTO STANDARD SPECIFICATIONS FOR STRUCTURAL SUPPORTS FOR HIGHWAY SIGNS, LUMINAIRES, AND TRAFFIC SIGNALS.
-50 YEAR DESIGN LIFE/RECURRENCE INTERVAL
-FATIGUE NOT CALCULATED FOR STRUCTURES LESS THAN 55'-0"

WIND VELOCITY:
90 MPH ISOTACH

MAXIMUM POLE DEFLECTION SHALL NOT EXCEED 0.7" IN 30 MPH WIND, 0.8" IN 35 MPH WIND, OR 1.4" IN 70 MPH WIND.

LOAD CASE #1:
(1) CAMERA - 4.0 SQ. FT. @ 2'-0" ABOVE POLE TOP.
(1) DISH - 12" DIA. @ POLE TOP.
(1) NEMA CABINET - 1.33 SQ.FT. @ 3'-8" FROM POLE TOP.

LOAD CASE #2:
(1) CAMERA - 4.0 SQ.FT. @ 2'-0" ABOVE POLE TOP.
(2) CAMERA - 0.54" SQ.FT. @ 1'-0" & 2'-0" FROM POLE TOP.
(2) NEMA CABINETS INSTALLED BACK TO BACK - 1.33 SQ.FT. @ 3'-8" FROM POLE TOP.
(2) RADIO EQUIPMENT - 2.25 SQ.FT. @ 2'-0" & 9'-0" FROM POLE TOP.

WELDING:
WELDING OF STRUCTURES SHALL BE IN ACCORDANCE WITH LATEST OF THE AWS STRUCTURAL WELDING CODE D1.1-STEEL. LONGITUDINAL SEAM WELD IS 60% MINIMUM PENETRATION EXCEPT FOR 6 INCHES FROM END OF SECTION AT FLANGE, BASEPLATE AND SLIP JOINT IT IS 100% PENETRATION.

WELD INSPECTION:
ALL LONGITUDINAL SEAM WELDS SHALL BE INSPECTED BY MAGNETIC PARTICLE METHOD FOR 30% OF LENGTH. 30% OF ALL FILLET & PARTIAL PENETRATION GROOVE WELDS SHALL BE EXAMINED WITH MAGNETIC PARTICLE TESTING.

MATERIAL DATA

COMPONENT	ASTM DESIGNATION	YIELD MIN. (KSI)	COMPONENT	ASTM DESIGNATION	MIN. (KSI) YIELD
POLE SHAFT	A572 GR.55	55	PIPE/TUBING	A53 GR. B	35
BASE PLATE POLE TOP PLATES BEARING PLATE MISC. PLATE	A36 OR A572 GR. 50	36 50		A501	36
				A513 GR. 1015	35
				A618	50
				A500 GR. B OR C	42
CAMERA CONNECTING BOLTS	F593	65	HANDHOLE RIM	A500 GR. B OR C *50 A513 GR. 1035 OR 1040 50	
ANCHOR BOLTS	F1554	105		*WITH FURTHER RESTRICTION ON MINIMUM YIELD STRENGTH HELD TO 50 KSI.	
ANCHOR BOLT NUTS	A563 GR. DH	--			
ANCHOR BOLT WASHERS	ASTM F436	--			
GALVANIZING - STRUCTURE	A123	--			
GALVANIZING - HARDWARE	F2329	--			

POLE DATA - LOAD CASE #1 - BRIDGE ELBOW MOUNT

POLE HEIGHT (FT)	QTY.	POLE TUBE				POLE BASE				CONNECTING BOLT DIA. (IN)
		BASE DIA. (IN)	TOP DIA. (IN)	LENGTH (FT)	GAUGE OR THICK (IN)	SQUARE "S" (IN)	BOLT CIRCLE "Y" (IN)	THK. "M" (IN)	HOLE / SLOT "Z" (IN)	
15		11.00	8.90	15.00	7	25.00	25.50	1.25	1.38	1.25
20		11.80	9.00	20.00	7	25.00	25.50	1.25	1.38	1.25
30		13.20	9.00	30.00	0.188	25.00	25.50	1.25	1.38	1.25
40		14.60	9.00	40.00	0.250	25.00	25.50	1.25	1.38	1.25
50		17.75	10.75	50.00	0.313	25.00	25.50	1.25	1.38	1.25

POLE DATA - LOAD CASE #1 - GROUND MOUNT

POLE HEIGHT (FT)	QTY.	POLE TUBE				POLE BASE				ANCHOR BOLT	
		BASE DIA. (IN)	TOP DIA. (IN)	LENGTH (FT)	GAUGE OR THICK (IN)	SQUARE "S" (IN)	BOLT CIRCLE "Y" (IN)	THK. "M" (IN)	HOLE / SLOT "Z" (IN)	DIA. "K" (IN)	LENGTH "J" (IN)
15		11.00	8.90	15.00	7	25.00	25.50	1.25	1.38	1.25	52.00
20		11.80	9.00	20.00	7	25.00	25.50	1.25	1.38	1.25	52.00
30		13.20	9.00	30.00	0.188	25.00	25.50	1.25	1.38	1.25	52.00
40		14.60	9.00	40.00	0.250	25.00	25.50	1.25	1.38	1.25	52.00
50		17.00	10.00	50.00	0.313	25.00	25.50	1.25	1.38	1.25	52.00

POLE DATA - LOAD CASE #2 - GROUND MOUNT ONLY

POLE HEIGHT (FT)	QTY.	POLE TUBE				POLE BASE				ANCHOR BOLT	
		BASE DIA. (IN)	TOP DIA. (IN)	LENGTH (FT)	GAUGE OR THICK (IN)	SQUARE "S" (IN)	BOLT CIRCLE "Y" (IN)	THK. "M" (IN)	HOLE / SLOT "Z" (IN)	DIA. "K" (IN)	LENGTH "J" (IN)
15		11.00	8.90	15.00	7	25.00	25.50	1.25	1.38	1.25	52.00
20		11.80	9.00	20.00	7	25.00	25.50	1.25	1.38	1.25	52.00
30		13.20	9.00	30.00	0.188	25.00	25.50	1.25	1.38	1.25	52.00
40		15.50	9.90	40.00	0.250	25.00	25.50	1.25	1.38	1.25	52.00
50		18.50	11.50	50.00	0.313	25.00	25.50	1.25	1.38	1.25	52.00

NOTE

1. POLE SHAFTS ARE ROUND WITH 0.14" TAPER.
2. PLEASE VERIFY POLE TOP CAMERA PLATE, DETAIL 1, TO ASSURE THE DIMENSIONS OF THE PLATE, BOLT CIRCLE, AND HARDWARE ARE ADEQUATE FOR THE REQUIRED CAMERA PRIOR TO RELEASING POLES FOR MANUFACTURING.
3. PLEASE VERIFY POLE DESIGN (LOAD CASE NUMBER) PRIOR TO RELEASING POLES FOR MANUFACTURING. STRUCTURES NOT CONFORMING TO APPROPRIATE LOAD CASE NUMBER SHALL BE CONSIDERED "SD" SPECIAL DESIGN STRUCTURES.
4. PLEASE VERIFY IF LOAD CASE #1 REQUIRES NEMA BOX COUPLINGS (DETAIL 6) PRIOR TO RELEASE FOR MANUFACTURE.
5. PLEASE NOTE: WHEN LOAD CASE #1 POLES ARE MOUNTED ON A BRIDGE ELBOW THE POLE RADIAL INDEX SHALL BE ROTATED TO HAVE LOWER HANDHOLE FACING ROADWAY. LOWER HANDHOLE MOUNTING HEIGHT TO BE ADJUSTED TO CLEAR TOP OF BARRIER OR RAILING (SEE SHEET 3).

STEPHEN R. OSBORN
STATE OF WASHINGTON
44852
REGISTERED
PROFESSIONAL ENGINEER
4/9/15

REV	DRAWN BY-DATE	CHECK BY-DATE	DESCRIPTION
T	BDB3 04/09/15	BDB3 04/09/15	REV BRIDGE ELBOW RADIUS. WAS: 10" IN ERROR
R	BDB3 03/06/15	BDB3 03/06/15	ADD NEMA BOX TO LOAD CASE #1 & BRIDGE ELBOW
P	RDS9 03/02/11	RDS9 03/02/11	REVISED GROUNDING & NEMA ATTACHMENT
—	JKC 04/25/06	JKC 04/25/06	— — — — — — — — — — — — — — — — — — — —

TITLE
STATE OF WASHINGTON
CAMERA POLES

VALMONT INDUSTRIES, INC. RESERVES THE RIGHT TO INSTALL VARIOUS, ENGINEER APPROVED, MATERIAL HANGING ACCOMMODATIONS TO FACILITATE THE MANUFACTURING PROCESS.

valmont
Valley, NE 68064
(402) 359-2201

DRAWING NUMBER DB00759
REV T

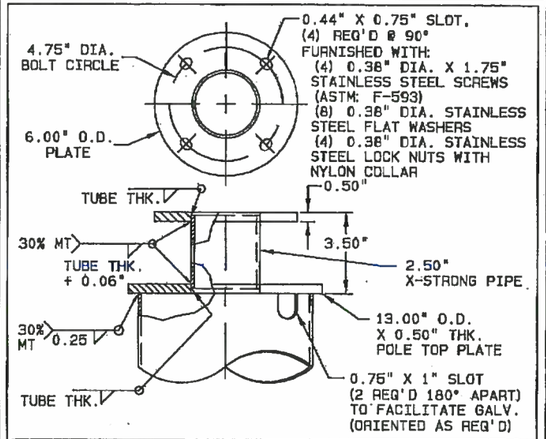

DETAIL 1 | POLE TOP CAMERA PLATE ASSY

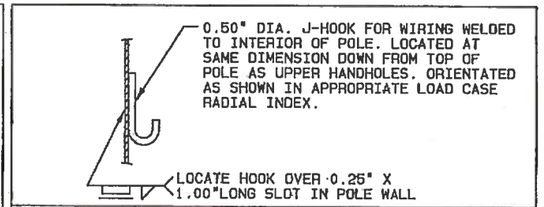

DETAIL 4 | J-HOOK FOR WIRING

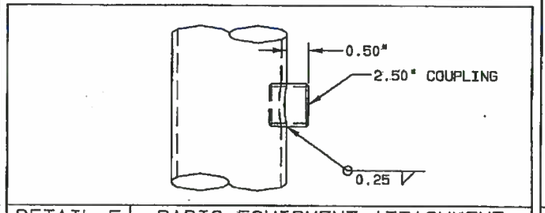

DETAIL 5 | RADIO EQUIPMENT ATTACHMENT

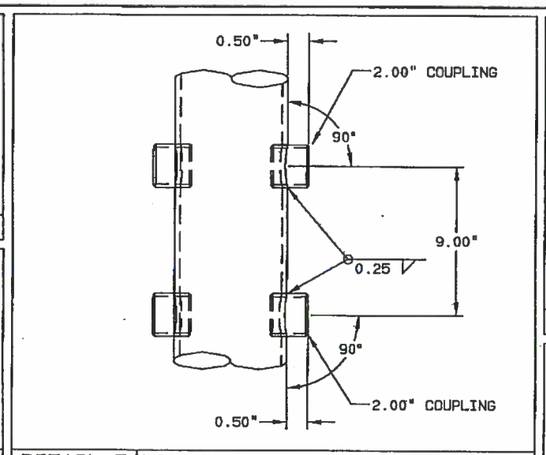

DETAIL 7 | LOAD CASE #2 NEMA BOX ATTACHMENT

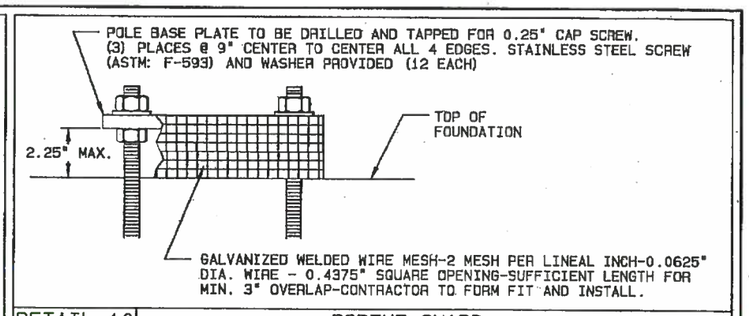

DETAIL 10 | RODENT GUARD

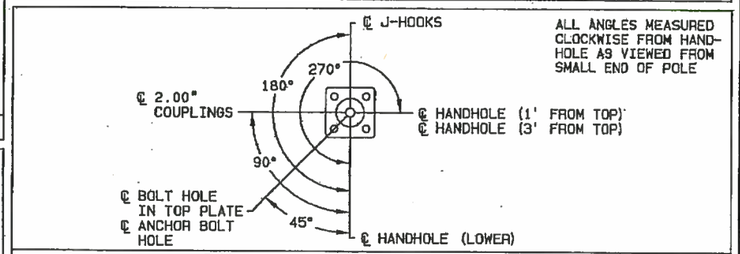

RADIAL INDEX - LOAD CASE #1

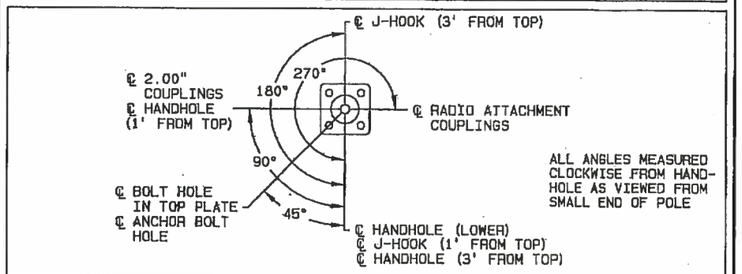

RADIAL INDEX - LOAD CASE #2

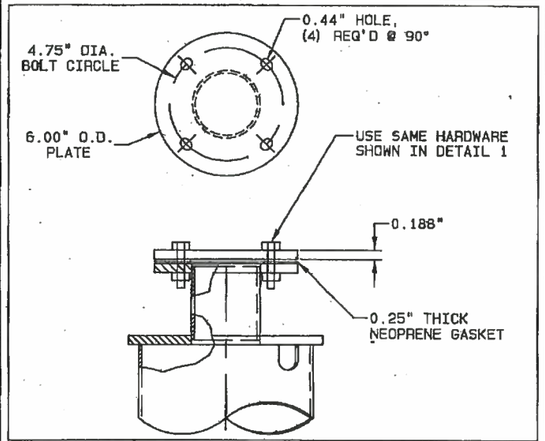

DETAIL 2 | CAMERA PLATE ASSEMBLY CAP

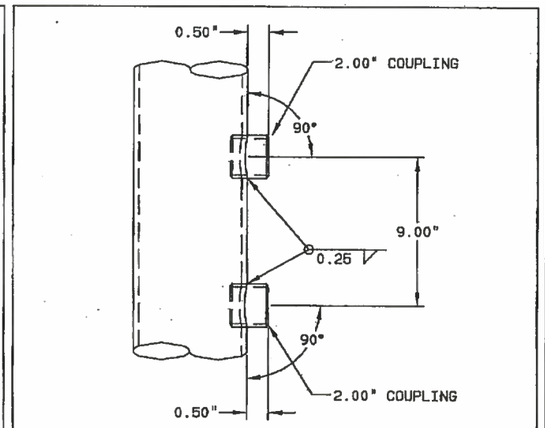

DETAIL 6 | LOAD CASE #1 NEMA BOX ATTACHMENT

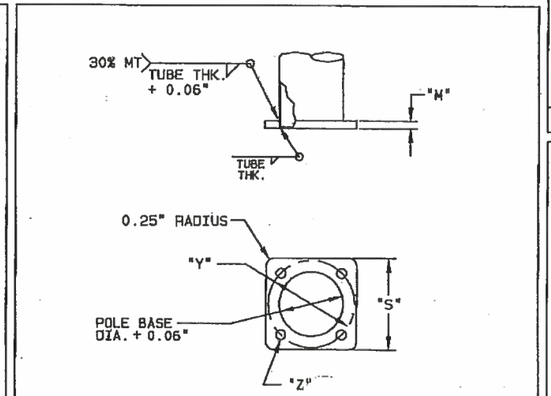

DETAIL 8 | POLE BASE

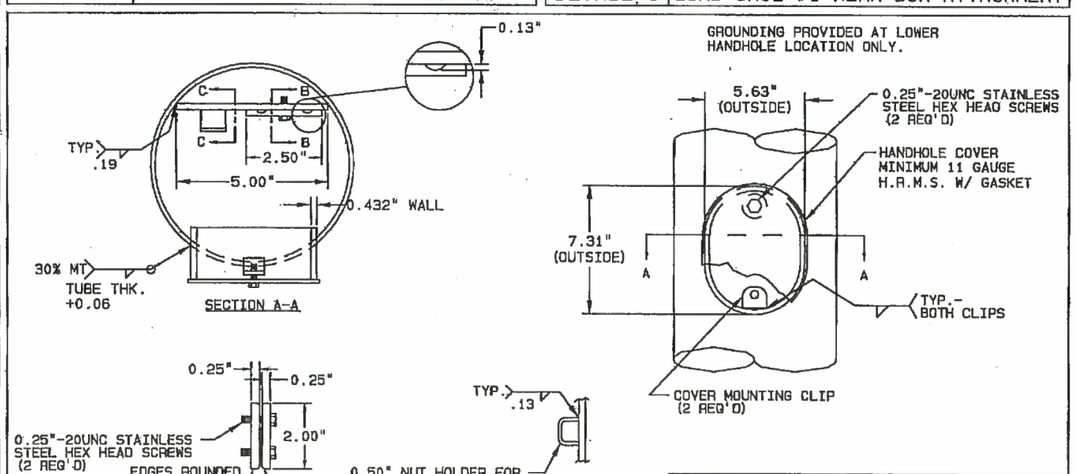

DETAIL 3 | HANDHOLE

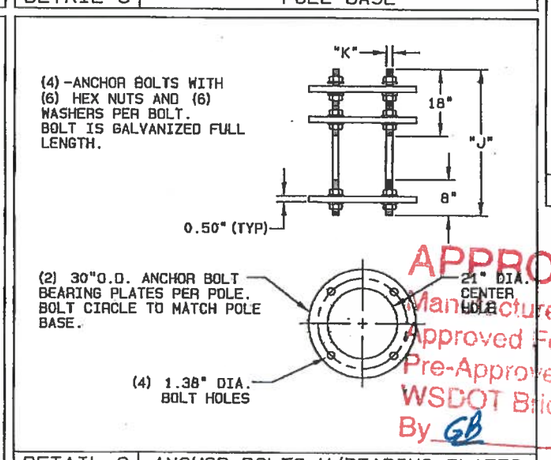

DETAIL 9 | ANCHOR BOLTS W/BEARING PLATES

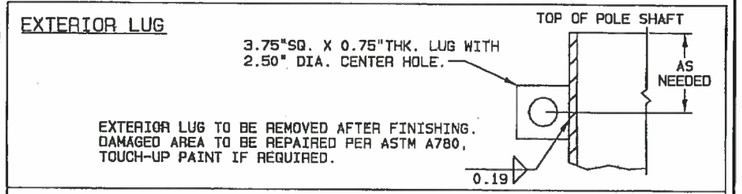

HANGING ACCOMMODATION TO FACILITATE MANUFACTURING PROCESS

APPROVED
Manufacturer's Pole Plan
Approved For Listing As A
Pre-Approved Drawing
WSDOT Bridge & Structures Office
By GB Date 4-15-2015

STEPHEN R. OSTRANDER
STATE OF WASHINGTON
44852
REGISTERED PROFESSIONAL ENGINEER
4/9/15

TITLE
STATE OF WASHINGTON
CAMERA POLES

VALMONT INDUSTRIES, INC. RESERVES THE RIGHT TO INSTALL VARIOUS, ENGINEER APPROVED, MATERIAL HANGING ACCOMMODATIONS TO FACILITATE THE MANUFACTURING PROCESS.

valmont
Valley, NE 68064
(402) 359-2201

PAGE NUMBER: 2 OF 3
DRAWING NUMBER: DB00759
REV: T

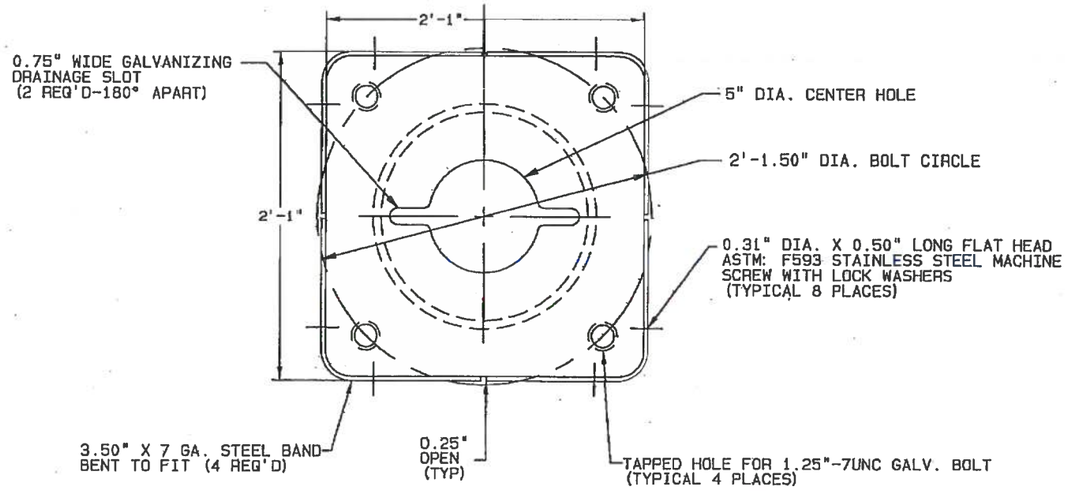

SECTION A-A

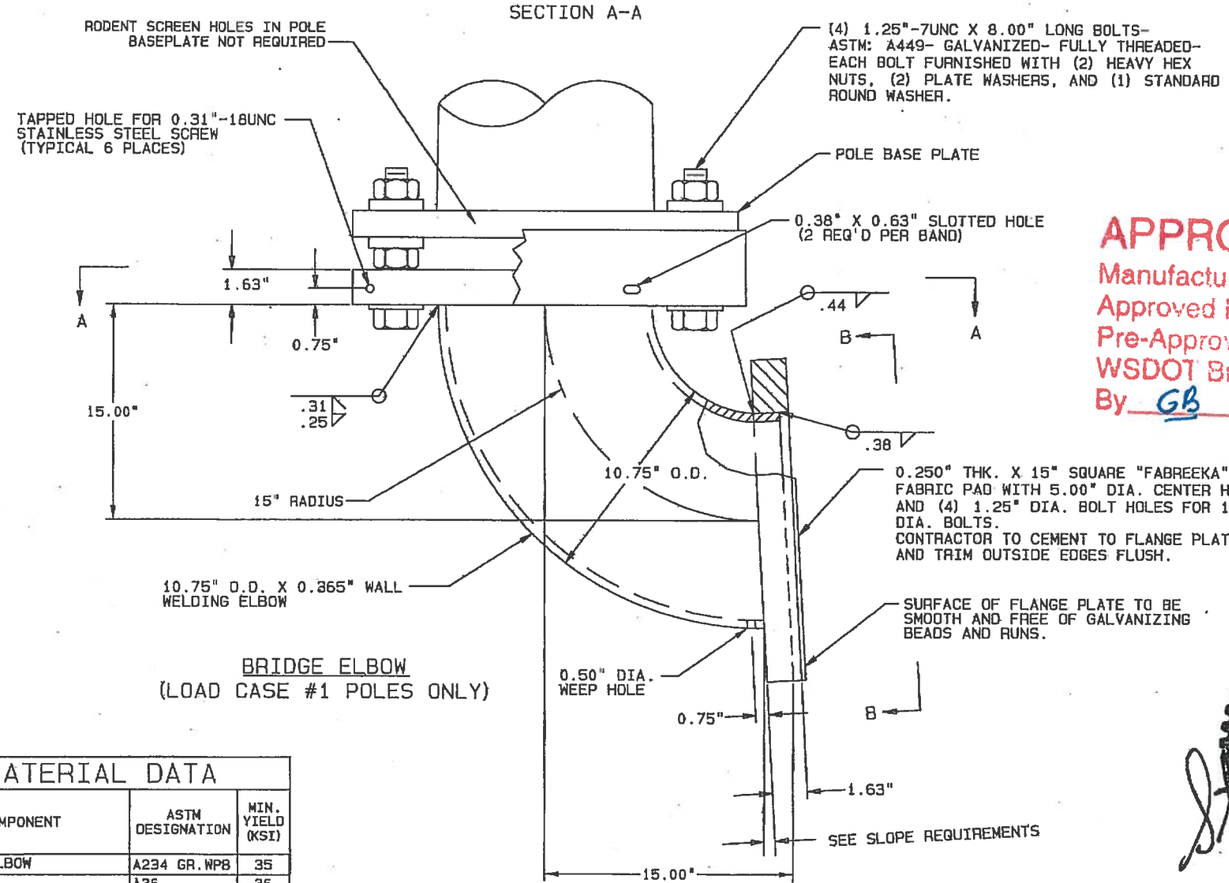

BRIDGE ELBOW
(LOAD CASE #1 POLES ONLY)

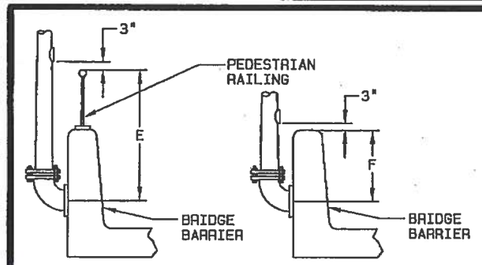

INFORMATION REQUIRED PRIOR TO RELEASE FOR MANUFACTURE

HANDHOLE ELEVATIONS
PLEASE PROVIDE AS REQUIRED:
E_____
F_____

SLOPE REQUIREMENTS
PLEASE PROVIDE DATA AS REQUIRED:
1. DIRECTION OF SLOPE: A, B, OR C _____
2. DEGREE (RATIO) OF SLOPE: D _____

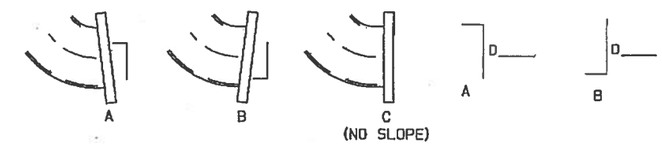

APPROVED
Manufacturer's Pole Plan
Approved For Listing As A
Pre-Approved Drawing
WSDOT Bridge & Structures Office
By GB Date 4-15-2015

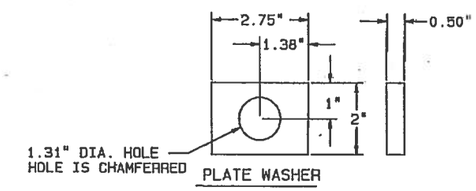

PLATE WASHER

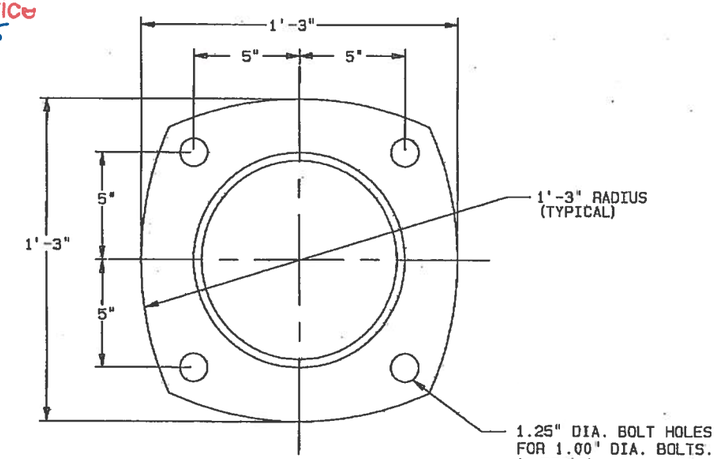

VIEW B-B

STEPHEN R. OSBORN
STATE OF WASHINGTON
44852
REGISTERED
PROFESSIONAL ENGINEER
4/9/15

MATERIAL DATA		
COMPONENT	ASTM DESIGNATION	MIN. YIELD (KSI)
WELDING ELBOW	A234 GR.WPB	35
PLATES	A36 OR A572 GR.50	36 50
STEEL BAND	HRMS	
SEE PAGE 1 OF 3 FOR ADDITIONAL MATERIAL DATA.		

TITLE
STATE OF WASHINGTON
CAMERA POLES

VALMONT INDUSTRIES, INC. RESERVES THE RIGHT TO INSTALL VARIOUS, ENGINEER APPROVED, MATERIAL HANGING ACCOMMODATIONS TO FACILITATE THE MANUFACTURING PROCESS.

valmont
Valley, NE 68064
(402) 359-2201

PAGE NUMBER: 3 OF 3
DRAWING NUMBER DB00759
REV T