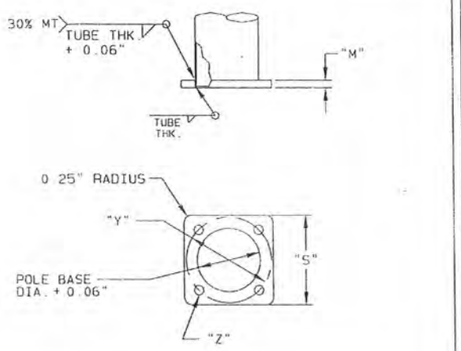

DETAIL 6 | POLE BASE

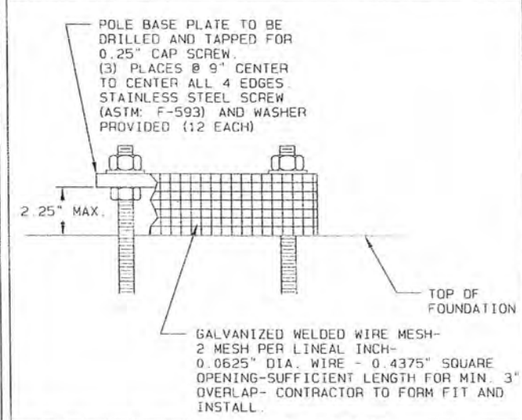

DETAIL 8 | RODENT GUARD

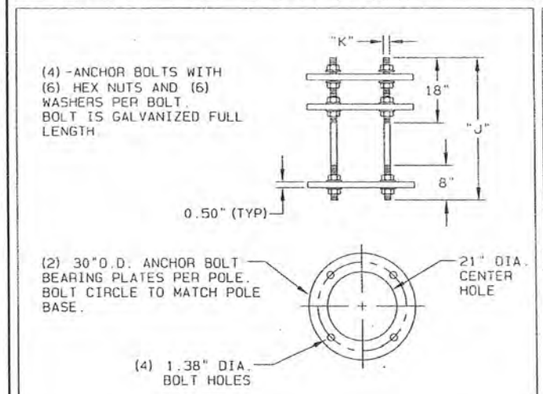

DETAIL 7 | ANCHOR BOLTS W/BEARING PLATES

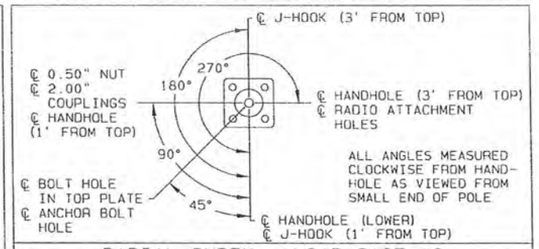

RADIAL INDEX - LOAD CASE #2

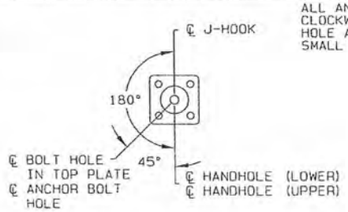

RADIAL INDEX - LOAD CASE #1

NOTES:

1. POLE SHAFTS ARE ROUND WITH 0.14" TAPER.
2. PLEASE VERIFY POLE TOP CAMERA PLATE, DETAIL 1, TO ASSURE THE DIMENSIONS OF THE PLATE, BOLT CIRCLE, AND HARDWARE ARE ADEQUATE FOR THE REQUIRED CAMERA PRIOR TO RELEASING POLES FOR MANUFACTURING.
3. PLEASE VERIFY POLE DESIGN (LOAD CASE NUMBER) PRIOR TO RELEASING POLES FOR MANUFACTURING.

APPROVED
Manufacturer's Pole Plan
Approved For Listing As A
Pre-Approved Drawing
WSDOT Bridge & Structures Office
By GB Date 3-16-2011

STEPHEN R. OSBORN
STATE OF WASHINGTON
REGISTERED
PROFESSIONAL ENGINEER
3/4/11

TITLE				
	STATE OF WASHINGTON CAMERA POLES	VALMONT INDUSTRIES, INC. RESERVES THE RIGHT TO INSTALL VARIOUS, ENGINEER APPROVED, MATERIAL HANGING ACCOMMODATIONS TO FACILITATE THE MANUFACTURING PROCESS.	valmont Valley, NE 68064 (402) 359-2201	PAGE NUMBER: 2 OF 2
			DRAWING NUMBER DB00759	REV P