LOADING INFORMATION:
TOTAL EPA: 5.30 SQ/FT
TOTAL WEIGHT: 163 LBS.

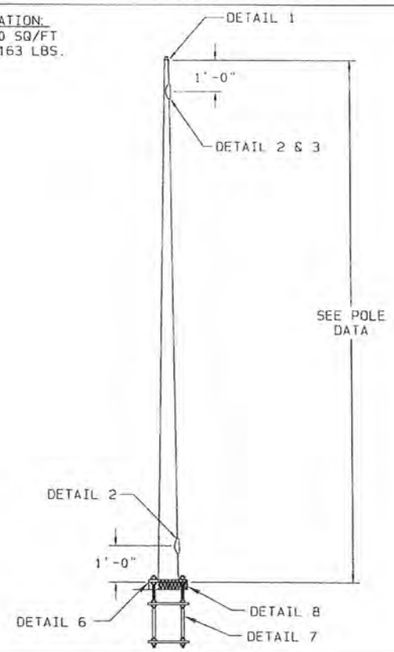

LOAD CASE #1

LOADING INFORMATION:
TOTAL EPA: 10.91 SQ/FT
TOTAL WEIGHT: 215 LBS.

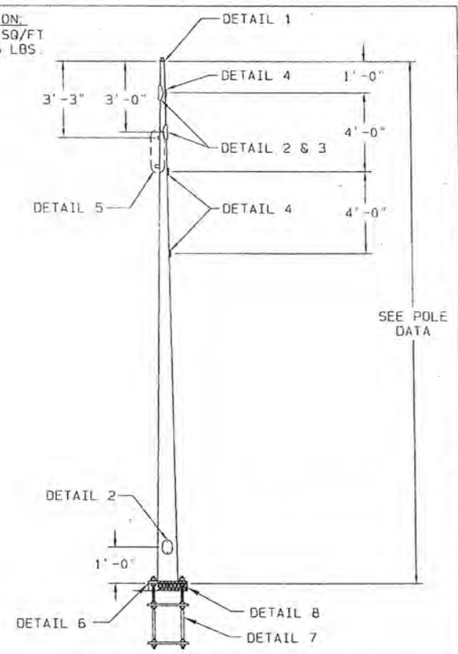

LOAD CASE #2

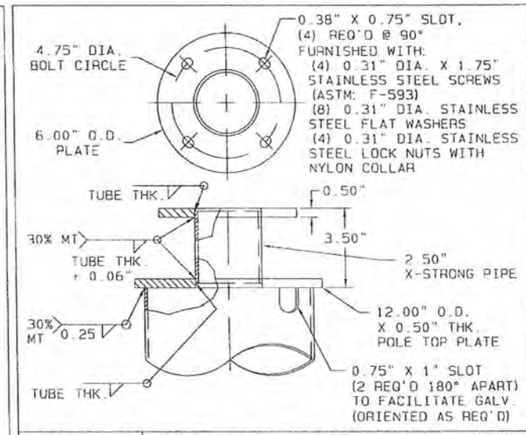

DETAIL 1 | POLE TOP CAMERA PLATE ASSY

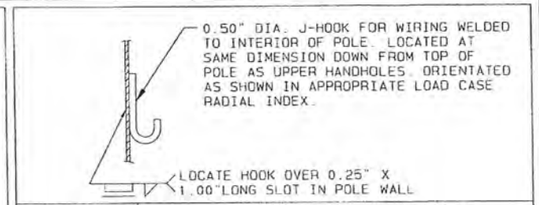

DETAIL 3 | J-HOOK FOR WIRING

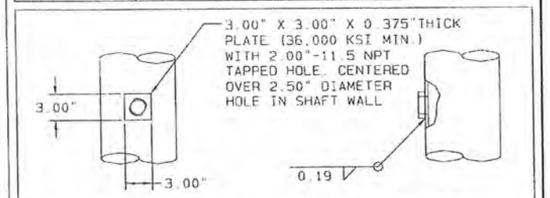

DETAIL 4 | RADIO ATTACHMENT HOLE

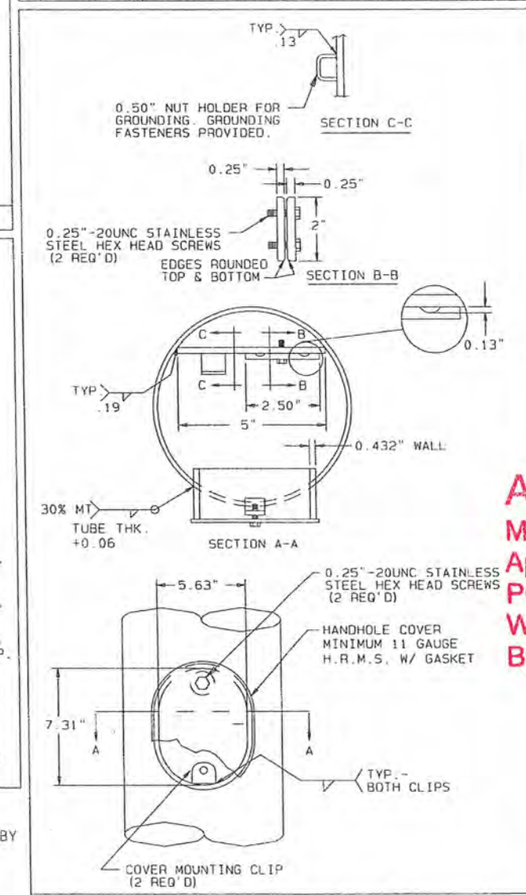

DETAIL 2 | HANDHOLE

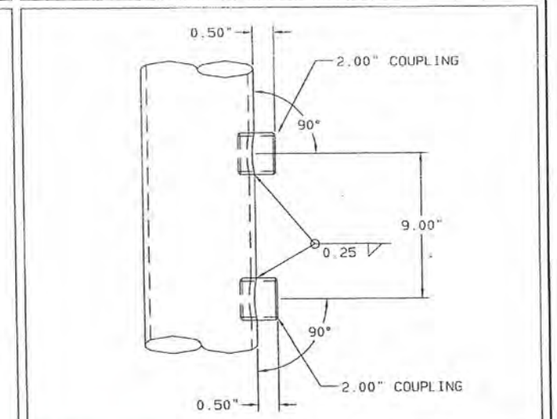

DETAIL 5 | NEMA BOX ATTACHMENT

MATERIAL DATA

COMPONENT	ASTM DESIGNATION	MIN. YIELD (KSI)	COMPONENT	ASTM DESIGNATION	MIN. YIELD (KSI)
POLE SHAFT	A572 GR.55	55	HANDHOLE RIM	A500 GR. B OR C	*50
BASE PLATE POLE TOP PLATES BEARING PLATE MISC. PLATE	A36 OR A572 GR. 50	36 50		A513 GR. 1035 OR 1040	50
				*WITH FURTHER RESTRICTION ON MINIMUM YIELD STRENGTH HELD TO 50 KSI.	
CAMERA CONNECTING BOLTS	F593	65	GALVANIZING	A123 & A153	
ANCHOR BOLTS	F1554	105			
PIPE	A500 GR. B OR C	35			

POLE DATA - LOAD CASE #1

POLE HEIGHT	QTY.	POLE TUBE				POLE BASE				ANCHOR BOLT	
		BASE DIA. (IN)	TOP DIA. (IN)	LENGTH (FT)	GAUGE OR THICK (IN)	SQUARE "S" (IN)	BOLT CIRCLE "Y" (IN)	THK. "M" (IN)	HOLE / SLOT "Z" (IN)	DIA. "K" (IN)	LENGTH "J" (IN)
30'		13.20	9.00	30.00	0.188	25.00	25.50	1.25	1.38	1.25	52.00
40'		14.60	9.00	40.00	0.250	25.00	25.50	1.25	1.38	1.25	52.00
50'		17.00	10.00	50.00	0.313	25.00	25.50	1.25	1.38	1.25	52.00

POLE DATA - LOAD CASE #2

POLE HEIGHT	QTY.	POLE TUBE				POLE BASE				ANCHOR BOLT	
		BASE DIA. (IN)	TOP DIA. (IN)	LENGTH (FT)	GAUGE OR THICK (IN)	SQUARE "S" (IN)	BOLT CIRCLE "Y" (IN)	THK. "M" (IN)	HOLE / SLOT "Z" (IN)	DIA. "K" (IN)	LENGTH "J" (IN)
30'		13.20	9.00	30.00	0.188	25.00	25.50	1.25	1.38	1.25	52.00
40'		15.50	9.90	40.00	0.250	25.00	25.50	1.25	1.38	1.25	52.00
50'		18.50	11.50	50.00	0.313	25.00	25.50	1.25	1.38	1.25	52.00

DESIGN CRITERIA:
2009 AASHTO STANDARD SPECIFICATIONS FOR STRUCTURAL SUPPORTS FOR HIGHWAY SIGNS, LUMINAIRES, AND TRAFFIC SIGNALS.
-50 YEAR DESIGN LIFE/RECURRENCE INTERVAL
-FATIGUE NOT CALCULATED FOR STRUCTURES LESS THAN 55'-0"

WIND VELOCITY:
90 MPH ISOTACH

MAXIMUM POLE DEFLECTION SHALL NOT EXCEED 0.7" IN 30 MPH WIND, 0.8" IN 35 MPH WIND, OR 1.4" IN 70 MPH WIND.

LOAD CASE #1: (1) CAMERA - 4.0 SQ. FT. @ 2'-0" ABOVE POLE TOP.
(1) DISH - 12" DIA. @ POLE TOP.

LOAD CASE #2: (1) CAMERA - 4.0 SQ.FT. @ 2'-0" ABOVE POLE TOP.
(2) CAMERA - 0.54" SQ.FT. @ 1'-0" & 2'-0" FROM POLE TOP.
(2) NEMA CABINETS INSTALLED BACK TO BACK - 1.33 SQ.FT. @ 3'-8" FROM POLE TOP.
(2) RADIO EQUIPMENT - 2.25 SQ.FT. @ 2'-0" & 9'-0" FROM POLE TOP.

WELDING:
WELDING OF STRUCTURES SHALL BE IN ACCORDANCE WITH LATEST OF THE AWS STRUCTURAL WELDING CODE D1.1-STEEL. LONGITUDINAL SEAM WELD IS 60% MINIMUM PENETRATION EXCEPT FOR 6 INCHES FROM END OF SECTION AT FLANGE, BASEPLATE AND SLIP JOINT IT IS 100% PENETRATION.

WELD INSPECTION:
ALL LONGITUDINAL SEAM WELDS SHALL BE INSPECTED BY MAGNETIC PARTICLE METHOD FOR 30% OF LENGTH. 30% OF ALL FILLET & PARTIAL PENETRATION GROOVE WELDS SHALL BE EXAMINED WITH MAGNETIC PARTICLE TESTING.

APPROVED
Manufacturer's Pole Plan
Approved For Listing As A
Pre-Approved Drawing
WSDOT Bridge & Structures Office
By GB Date 3-16-2011

STEPHEN R. OSBORN
STATE OF WASHINGTON
REGISTERED PROFESSIONAL ENGINEER
3/4/11

REV	DRAWN BY-DATE	CHECK BY-DATE	DESCRIPTION
P	RDS9 03/02/11	RDS9 03/02/11	REVISED GROUNDING & NEMA ATTACHMENT
N	RDS9 01/26/11	RDS9 01/27/11	REVISED LOAD CASE 2 POLE SIZES
M	BDB3 11/30/10	BDB3 11/30/10	ADDED RODENT SCREEN & LOAD CASE #2
—	JKC 04/25/06	JKC 04/25/06	— — — — — — — — — — — — — — — — — — — —

TITLE
STATE OF WASHINGTON
CAMERA POLES

VALMONT INDUSTRIES, INC. RESERVES THE RIGHT TO INSTALL VARIOUS, ENGINEER APPROVED, MATERIAL HANGING ACCOMMODATIONS TO FACILITATE THE MANUFACTURING PROCESS.

valmont
Valley, NE 68064
(402) 359-2201

PAGE NUMBER: 1 OF 2
DRAWING NUMBER: DB00759
REV: P