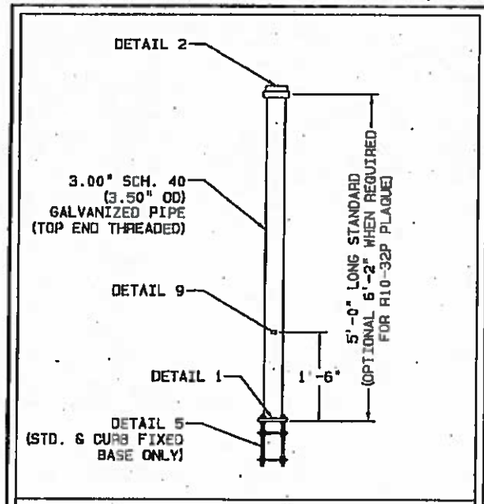

QTY. STD.:	
QTY. CURB:	
QTY. BREAKAWAY:	

TYPE PPB POST

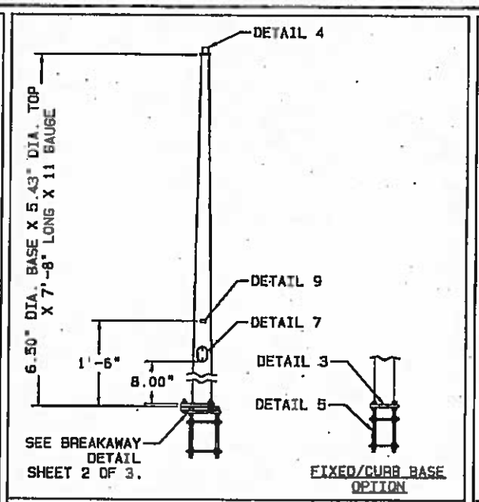

QTY. SLIP BASE:	
QTY. SLIP BASE ON CURB:	
QTY. 4 BOLT FIXED BASE:	
QTY. 4 BOLT CURB BASE:	

TYPE PS POLE

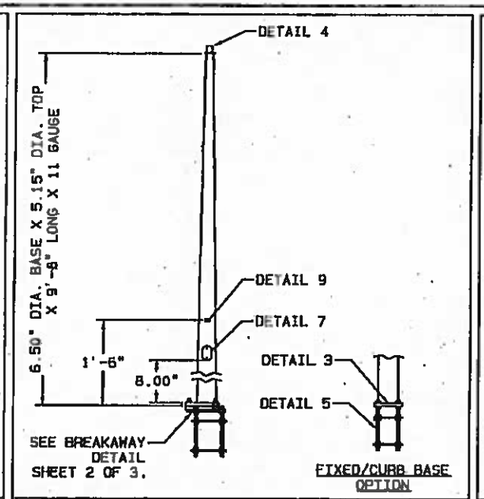

QTY. SLIP BASE:	
QTY. SLIP BASE ON CURB:	
QTY. 4 BOLT FIXED BASE:	
QTY. 4 BOLT CURB BASE:	

TYPE I POLE

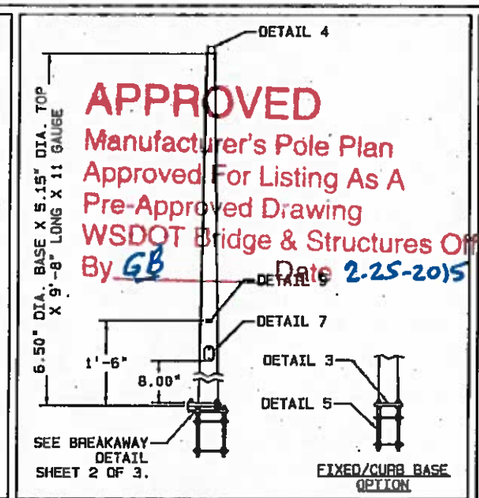

APPROVED
Manufacturer's Pole Plan
Approved For Listing As A
Pre-Approved Drawing
WSDOT Bridge & Structures Office
By GB Date 2-25-2015

QTY. SLIP BASE:	
QTY. SLIP BASE ON CURB:	
QTY. 4 BOLT FIXED BASE:	
QTY. 4 BOLT CURB BASE:	

RAMP METER POLE

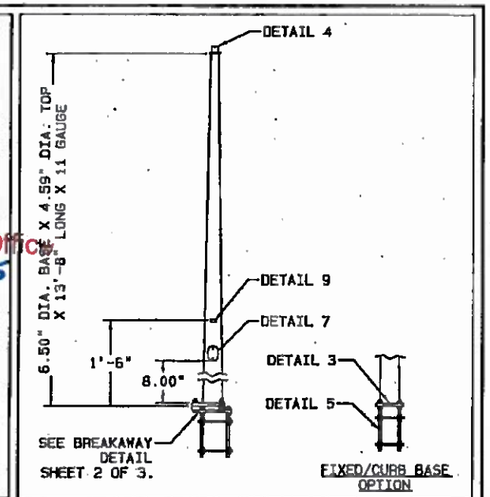

QTY. SLIP BASE:	
QTY. SLIP BASE ON CURB:	
QTY. 4 BOLT FIXED BASE:	
QTY. 4 BOLT CURB BASE:	

FLASHING BEACON POLE

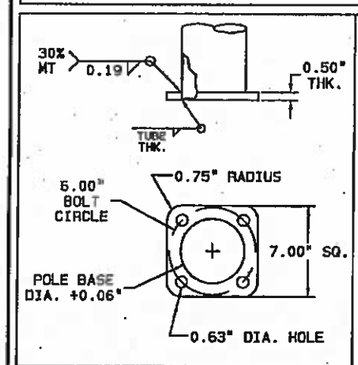

FIXED BASE - STD./CURB

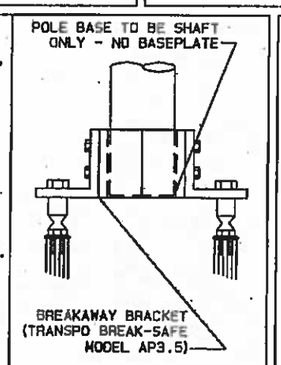

BREAKAWAY BASE

DETAIL 1 — POLE BASE - PPB POST

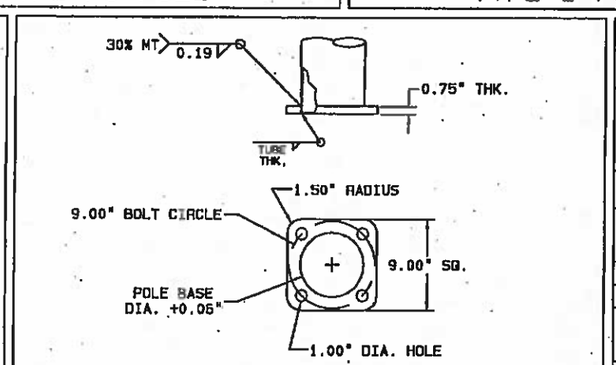

DETAIL 3 — POLE BASE - TYPE PS, TYPE I, FLASHING BEACON, & RAMP METER POLES

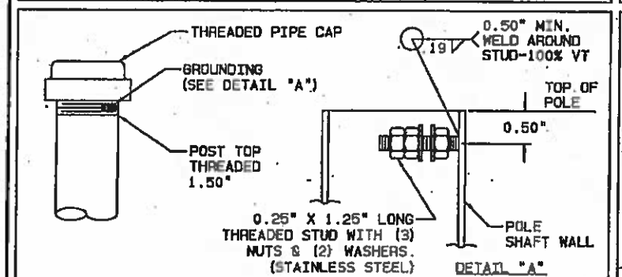

DETAIL 2 — POLE TOP - PPB POST

NOTE:
AN ALUMINUM POLE TOP CAP WITH SET SCREWS IS PROVIDED WITH EACH POLE TO ACCOMMODATE SIDE MOUNTED PEDESTRIAN/ VEHICLE HEADS.

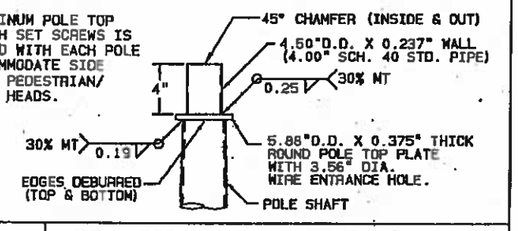

DETAIL 4 — POLE TOP - TYPE PS, TYPE I, RAMP METER, & FLASHING BEACON POLES

MATERIAL DATA

COMPONENT	DESIGNATION	MIN. YIELD (KSI)
POLE SHAFT-TYPE PPB POST	A53 GR. B A501 A513 GR.1015 A618 A500 GR.B	35 36 35 50 42
POLE SHAFT-TYPE PS, TYPE I, RAMP METER, FLASHING BEACON	A595 GR.A	55
BASE PLATE	A36 OR A572 GR.50	36 50
BOTTOM SLIP PLATE	A572 GR.50	50
ANCHOR PLATE	A572 GR.50	50
PLATE WASHERS	A36 OR A572 GR.50	36 50
KEEPER PLATE (COATING: G90)	A653 GR.33	--
TOP PLATE	A36 OR A572 GR.50	36 50
PIPING/TUBING	SEE "PPB POLE SHAFT" MATERIAL	
HANDHOLE RIM	A500 GR.B	42
ANCHOR BOLTS NUTS WASHERS	F1554 GR.55 ASTM A563 GR.DH ASTM F463	55 -- --
GALVANIZING - STRUCTURE GALVANIZING - HARDWARE	A123 F2329	-- --

GENERAL NOTES:
1. ALL VEHICULAR AND/OR PEDESTRIAN SIGNAL LIGHTS AND NECESSARY HARDWARE FOR ATTACHMENT TO BE FIELD LOCATED AND FURNISHED BY OTHERS.
2. THE DESIGN & WELDING OF THESE STEEL STRUCTURES SHALL BE IN ACCORDANCE WITH SECTION 5.15 OF THE "SPECIFICATIONS FOR STRUCTURAL SUPPORTS OF HIGHWAY SIGNS, LUMINAIRES AND TRAFFIC SIGNALS", AASHTO 2009.
3. WELDING OF STRUCTURES SHALL BE IN ACCORDANCE WITH THE LATEST OF THE AWS STRUCTURAL WELDING CODE D1.1-STEEL. LONGITUDINAL SEAM WELD IS 60% MINIMUM PENETRATION.

WELD INSPECTION:
ALL LONGITUDINAL SEAM WELDS SHALL BE INSPECTED BY MAGNETIC PARTICLE METHOD FOR 30% OF LENGTH.
30% OF ALL FILLET & PARTIAL PENETRATION GROOVE WELDS SHALL BE EXAMINED WITH MAGNETIC PARTICLE TESTING.

STEPHEN R. OSBORN
STATE OF WASHINGTON
44852
REGISTERED
PROFESSIONAL ENGINEER
1/9/15

REV	DRAWN BY-DATE	CHECK BY-DATE	DESCRIPTION
L	JH84 10/31/14	BDB3 01/08/15	ADDED CURB BASE TO ALL POLES
K	BDB3 01/10/14	BDB3 01/10/14	ADD BRKWY PPB & FIXED/SLIP POLES & GANDING
J	BDB3 07/21/11	BDB3 07/21/11	ADDED HANGING DETAIL/UPDATED NOTES
—	JKC 04/30/03	JKC 04/30/03	— — — — — — — — — — — — — — — — — — — —

TITLE: STATE OF WASHINGTON PED POLES

VALMONT INDUSTRIES, INC. RESERVES THE RIGHT TO INSTALL VARIOUS, ENGINEER APPROVED, MATERIAL HANDING ACCOMMODATIONS TO FACILITATE THE MANUFACTURING PROCESS.

valmont
Valley, NE 68064
(402) 359-2201

DRAWING NUMBER: DB00655 REV: L

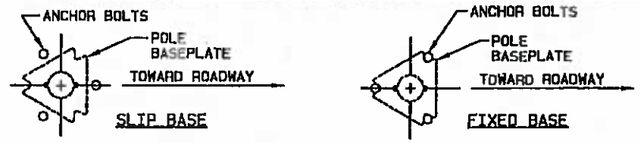

ANCHOR BOLT LAYOUT

NOTE:
1. BASEPLATE WITHOUT THE BOTTOM SLIP PLATE AND ANCHOR PLATE IS A FIXED BASE. WHERE A FIXED BASE IS REQUIRED BY PLANS OR SPECIAL PROVISIONS, ROTATE THE ANCHOR BOLT PATTERN 180° AND BOLT THE BASEPLATE DIRECTLY TO THE FOUNDATION.

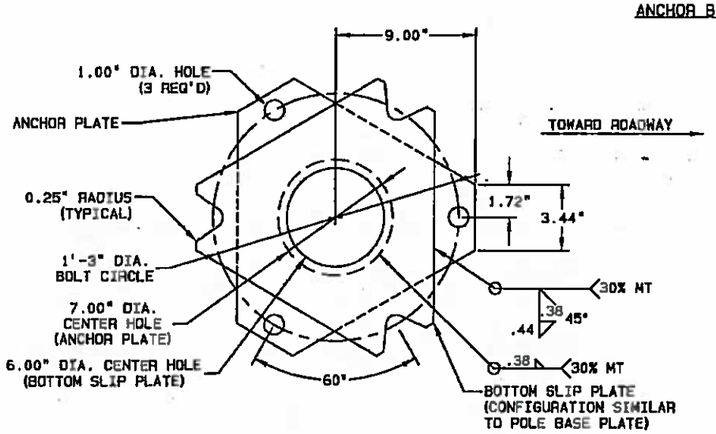

BOTTOM SLIP PLATE AND ANCHOR PLATE

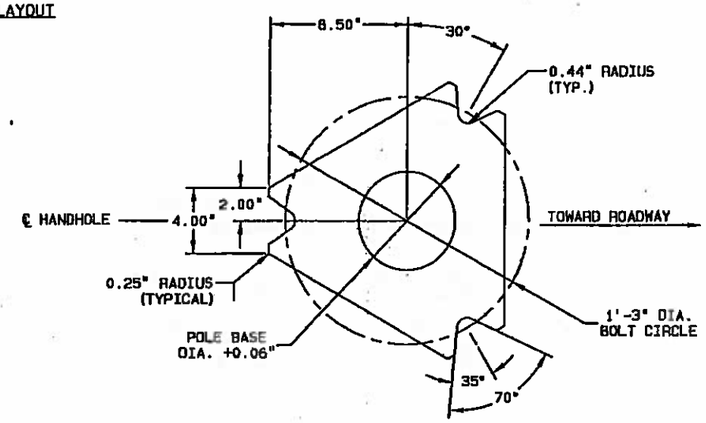

POLE BASE PLATE

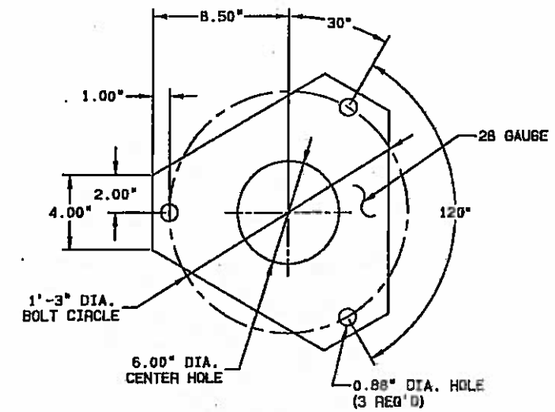

KEEPER PLATE

PLACE BETWEEN POLE BASE PLATE AND BOTTOM SLIP PLATE ON TOP OF MIDDLE WASHERS.

APPROVED
Manufacturer's Pole Plan
Approved For Listing As A
Pre-Approved Drawing
WSDOT Bridge & Structures Office
By GB Date 2-25-2015

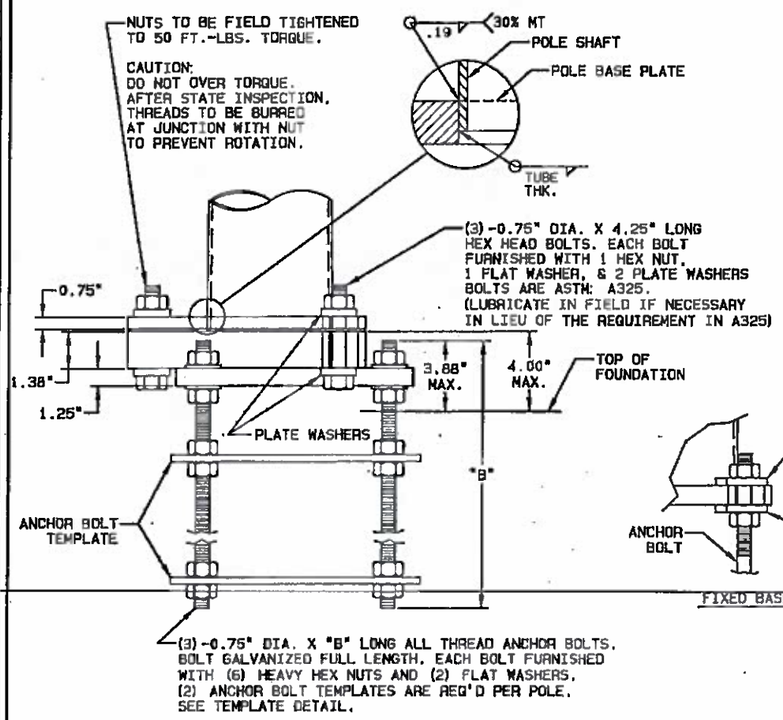

BREAKAWAY BASE ELEVATION

BREAKAWAY BASE DETAIL

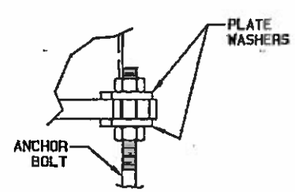

FIXED BASE

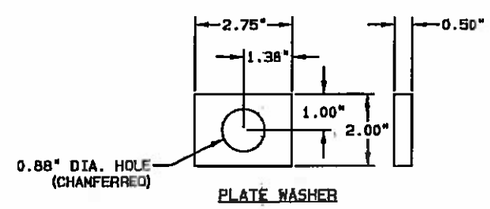

PLATE WASHER

ANCHOR BOLT LENGTH	
FOUNDATION TYPE	BOLT LENGTH "B" (IN)
STANDARD	30.00
* CURB	36.00

* CURB FOUNDATION DESIGN SHALL MEET AASHTO AND FHWA REQUIREMENTS FOR BREAKAWAY BASES.

NOTE:
THE SLIPBASE ASSEMBLY SHOWN CONFORMS TO THE BREAKAWAY CRITERIA SPECIFIED IN THE 2001 AASHTO STANDARD SPECIFICATIONS FOR STRUCTURAL SUPPORTS FOR HIGHWAY SIGNS, LUMINAIRES, AND TRAFFIC SIGNALS, AND HAS BEEN APPROVED BY THE FEDERAL HIGHWAY ADMINISTRATION (FHWA).

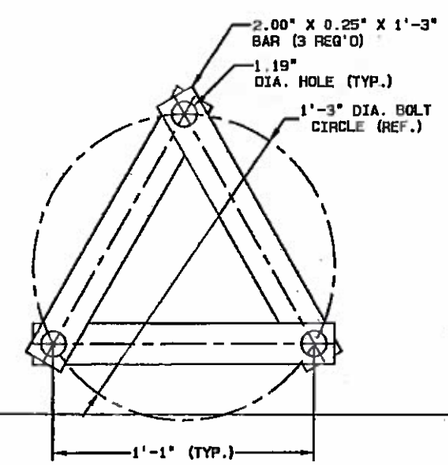

ANCHOR BOLT TEMPLATE

(2) TEMPLATES REQ'D PER POLE-STRAPS ARE SHIPPED LOOSE

STEPHEN R. OSBORN
STATE OF WASHINGTON
44852
REGISTERED PROFESSIONAL ENGINEER
1/9/15

TITLE
STATE OF WASHINGTON
PED POLES

VALMONT INDUSTRIES, INC. RESERVES THE RIGHT TO INSTALL VARIOUS, ENGINEER APPROVED, MATERIAL HANDING ACCOMMODATIONS TO FACILITATE THE MANUFACTURING PROCESS.

valmont
Valley, NE 68064
(402) 359-2201

DRAWING NUMBER DB00655
REV L

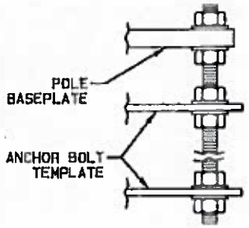

(4)-"A" DIA. X "B" LONG ANCHOR BOLTS. EACH BOLT TO HAVE MINIMUM THREAD LENGTH OF "C" AT TOP AND "D" AT BOTTOM. BOLT GALVANIZED FULL LENGTH. EACH BOLT FURNISHED WITH (6) HEAVY HEX NUTS AND (6) FLAT WASHERS. (2) ANCHOR BOLT TEMPLATES ARE REQ'D PER POLE. SEE ANCHOR BOLT TEMPLATE PLATE DETAIL 6.

ANCHOR BOLT SCHEDULE

POLE TYPE	DIAMETER "A" (IN)	LENGTH "B" (IN)	THREAD LENGTH "C" (IN)	THREAD LENGTH "D" (IN)
PPB - STD.	0.50	18.00	ALL THREAD	
PPB - CURB	0.50	24.00	ALL THREAD	
TYPE PS, TYPE I, FB, & RM FIXED BASE	0.75	30.00	ALL THREAD	
TYPE PS, TYPE I, FB, & RM CURB BASE	0.75	36.00	ALL THREAD	

DETAIL 5 | FIXED BASE ANCHOR BOLT

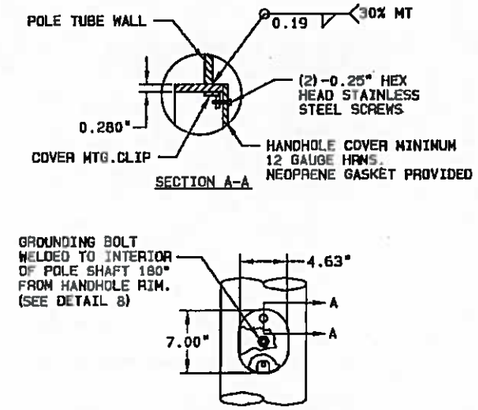

DETAIL 7 | HANDHOLE

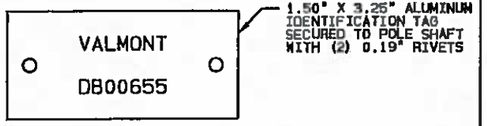

DETAIL 9 | I.D. TAG

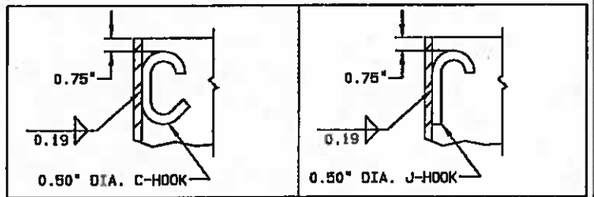

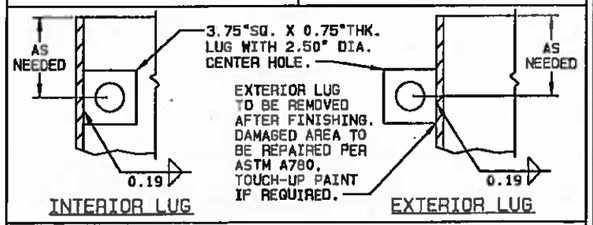

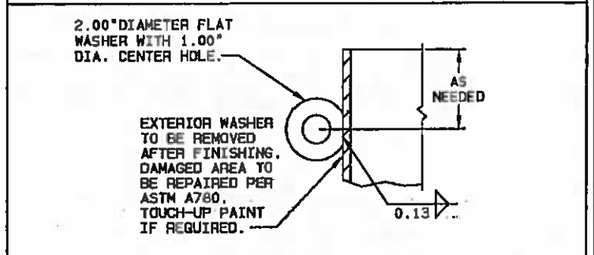

POLE - 1,000 LBS. OR LESS - (1) C-HOOK OR J-HOOK
1,001 LBS. THRU 2,000 LBS. - (2) C-HOOKS OR J-HOOKS
OVER 2,000 LBS. - (1) LUG

(AN EXTERIOR WASHER MAY REPLACE C-HOOK OR J-HOOK AT MANUFACTURER DISCRETION)

STANDARD MATERIAL HANGING ACCOMMODATIONS TO FACILITATE MANUFACTURING PROCESS

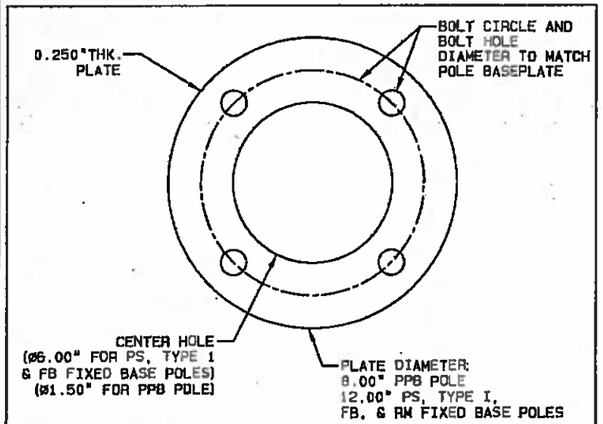

(2) TEMPLATE PLATES REQ'D PER POLE

DETAIL 6 | FIXED BASE ANCHOR BOLT TEMPLATE

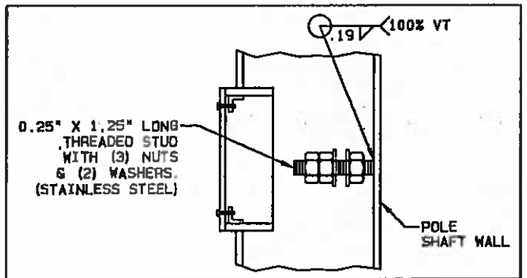

DETAIL 8 | GROUNDING

APPROVED
Manufacturer's Pole Plan
Approved For Listing As A
Pre-Approved Drawing
WSDOT Bridge & Structures Office
By GB Date 2-25-2015

STEPHEN R. OSBORN
STATE OF WASHINGTON
44832
REGISTERED PROFESSIONAL ENGINEER
1/9/15

TITLE			
STATE OF WASHINGTON PED POLES	VALMONT INDUSTRIES, INC. RESERVES THE RIGHT TO INSTALL VARIOUS, ENGINEER APPROVED, MATERIAL HANGING ACCOMMODATIONS TO FACILITATE THE MANUFACTURING PROCESS.	valmont Valley, NE 68064 (402) 359-2201	PAGE NUMBER: 3 OF 3 DRAWING NUMBER DB00655 REV L