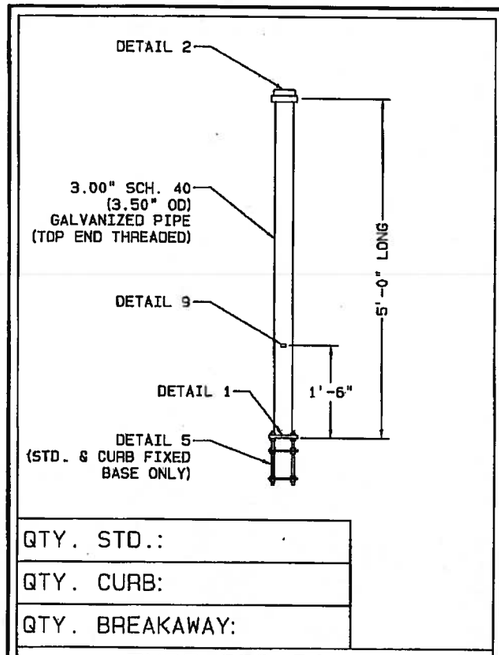

QTY. STD.:	
QTY. CURB:	
QTY. BREAKAWAY:	

TYPE PPB POST

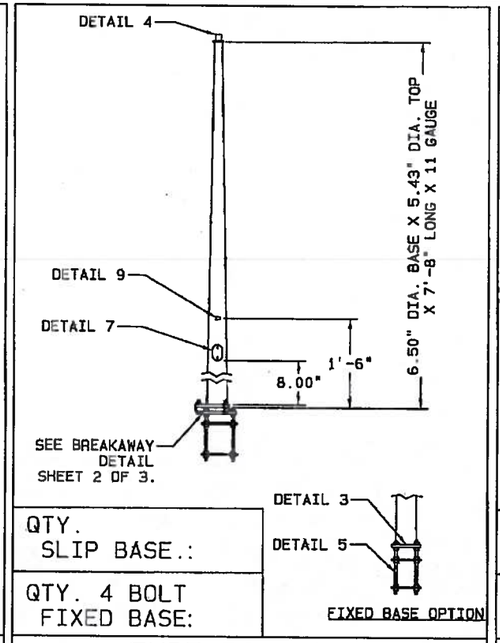

QTY. SLIP BASE.:	
QTY. 4 BOLT FIXED BASE:	

TYPE PS POLE

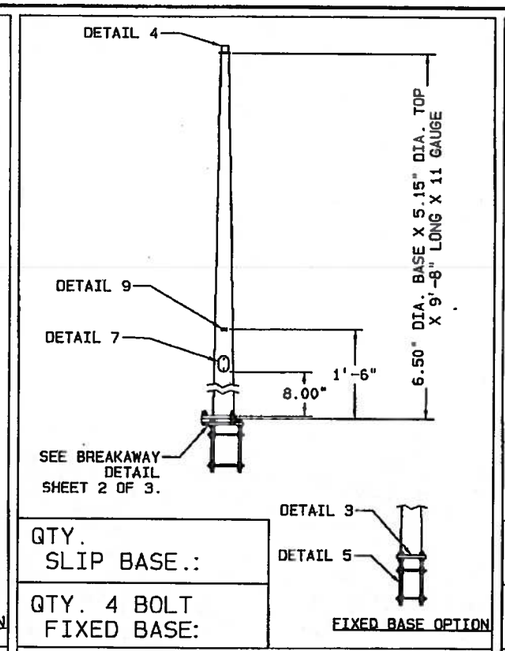

QTY. SLIP BASE.:	
QTY. 4 BOLT FIXED BASE:	

TYPE I POLE

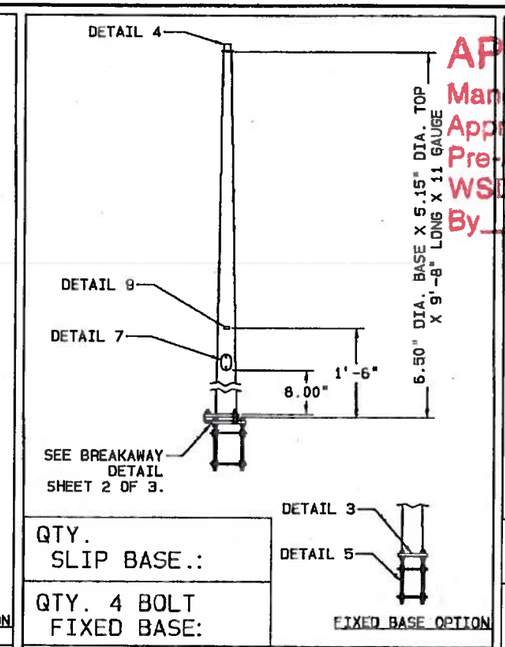

QTY. SLIP BASE.:	
QTY. 4 BOLT FIXED BASE:	

RAMP METER POLE

APPROVED
Manufacturer's Pole Plan
Approved For Listing As A
Pre-Approved Drawing
WSDOT Bridge & Structures Office
By GB Date 1-22-2014

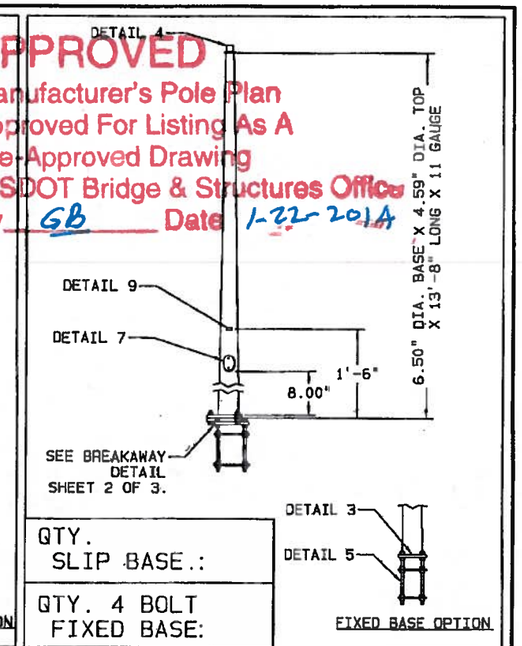

QTY. SLIP BASE.:	
QTY. 4 BOLT FIXED BASE:	

FLASHING BEACON POLE

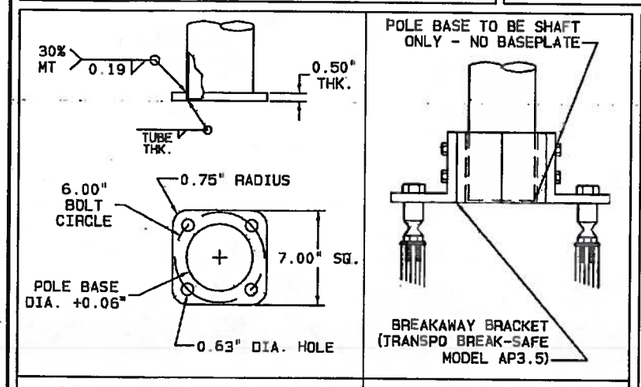

FIXED BASE - STD./CURB | BREAKAWAY BASE

DETAIL 1 | POLE BASE - PPB POST

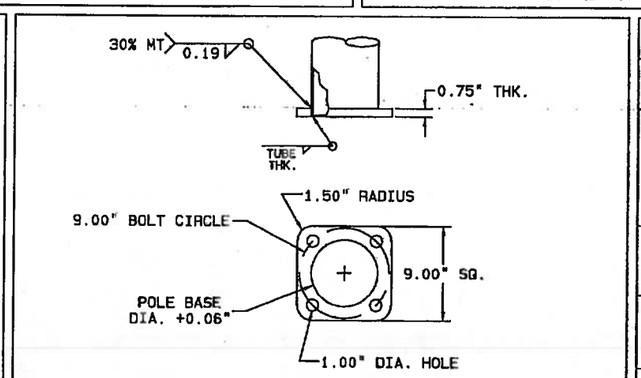

DETAIL 3 | POLE BASE - TYPE PS, TYPE I, FLASHING BEACON, & RAMP METER POLES

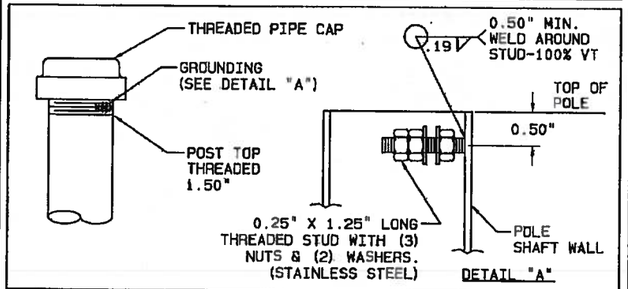

DETAIL 2 | POLE TOP - PPB POST

NOTE:
AN ALUMINUM POLE TOP CAP WITH SET SCREWS IS PROVIDED WITH EACH POLE TO ACCOMMODATE SIDE MOUNTED PEDESTRIAN/ VEHICLE HEADS.

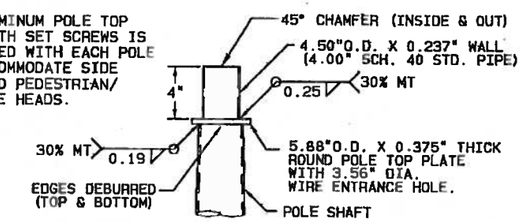

DETAIL 4 | POLE TOP - TYPE PS, TYPE I, RAMP METER, & FLASHING BEACON POLES

MATERIAL DATA

COMPONENT	DESIGNATION	MIN. YIELD (KSI)
POLE SHAFT - TYPE PPB POST	A501 A513 GR. 1015 A618 A500 GR.B	36 35 50 42
BASE PLATE/ANCHOR PLATE	A36 OR A572 GR. 50	36 50
POLE SHAFT - TYPE PS, TYPE I, RAMP METER, FLASHING BEACON	A595 GR. A	55
BASE PLATE	A36 OR A572 GR. 50	36 50
SLIP BASE PLATE	A572 GR. 50	50
BOTTOM SLIP PLATE ANCHOR PLATE PLATE WASHERS KEEPER PLATE (COATING: G90)	A572 GR. 50 A572 GR. 50 A36 OR A572 GR. 50 A653 GR. 33	50 50 36 50
TOP PLATE	A36 OR A572 GR. 50	36 50
PIPE/TUBING	SEE "PPB POLE SHAFT" MATERIAL	
HANDHOLE RIM	A500 GR. B	42
ANCHOR BOLTS NUTS WASHERS	F1554 GR. 55 ASTM A563 GR. DH ASTM F463	55 -- --
GALVANIZING - STRUCTURE	A123	--
GALVANIZING - HARDWARE	F2329	--

GENERAL NOTES:
1. ALL VEHICULAR AND/OR PEDESTRIAN SIGNAL LIGHTS AND NECESSARY HARDWARE FOR ATTACHMENT TO BE FIELD LOCATED AND FURNISHED BY OTHERS.
2. THE DESIGN & WELDING OF THESE STEEL STRUCTURES SHALL BE IN ACCORDANCE WITH SECTION 5.15 OF THE "SPECIFICATIONS FOR STRUCTURAL SUPPORTS OF HIGHWAY SIGNS, LUMINAIRES AND TRAFFIC SIGNALS", AASHTO 2009.
3. WELDING OF STRUCTURES SHALL BE IN ACCORDANCE WITH THE LATEST OF THE AWS STRUCTURAL WELDING CODE D1.1-STEEL. LONGITUDINAL SEAM WELD IS 60% MINIMUM PENETRATION.

WELD INSPECTION:
ALL LONGITUDINAL SEAM WELDS SHALL BE INSPECTED BY MAGNETIC PARTICLE METHOD FOR 30% OF LENGTH.
30% OF ALL FILLET & PARTIAL PENETRATION GROOVE WELDS SHALL BE EXAMINED WITH MAGNETIC PARTICLE TESTING.

REV	DRAWN BY-DATE	CHECK BY-DATE	DESCRIPTION
K	BDB3 01/10/14	BDB3 01/10/14	ADD BRKWY PPB & FIXED/SLIP POLES & GRNDING
J	BDB3 07/21/11	BDB3 07/21/11	ADDED HANGING DETAIL/UPDATED NOTES
H	BDB3 08/10/10	BDB3 08/10/10	UPDATED ANCHOR BOLTS AND TO 2009 AASHTO
—	JKC 04/30/03	JKC 04/30/03	— — — — — — — — — — — — — — — — — — — —

TITLE
STATE OF WASHINGTON
PED POLES

VALMONT INDUSTRIES, INC. RESERVES THE RIGHT TO INSTALL VARIOUS, ENGINEER APPROVED, MATERIAL HANGING ACCOMMODATIONS TO FACILITATE THE MANUFACTURING PROCESS.

valmont
Valley, NE 68064
(402) 359-2201

DRAWING NUMBER DB00655
REV K