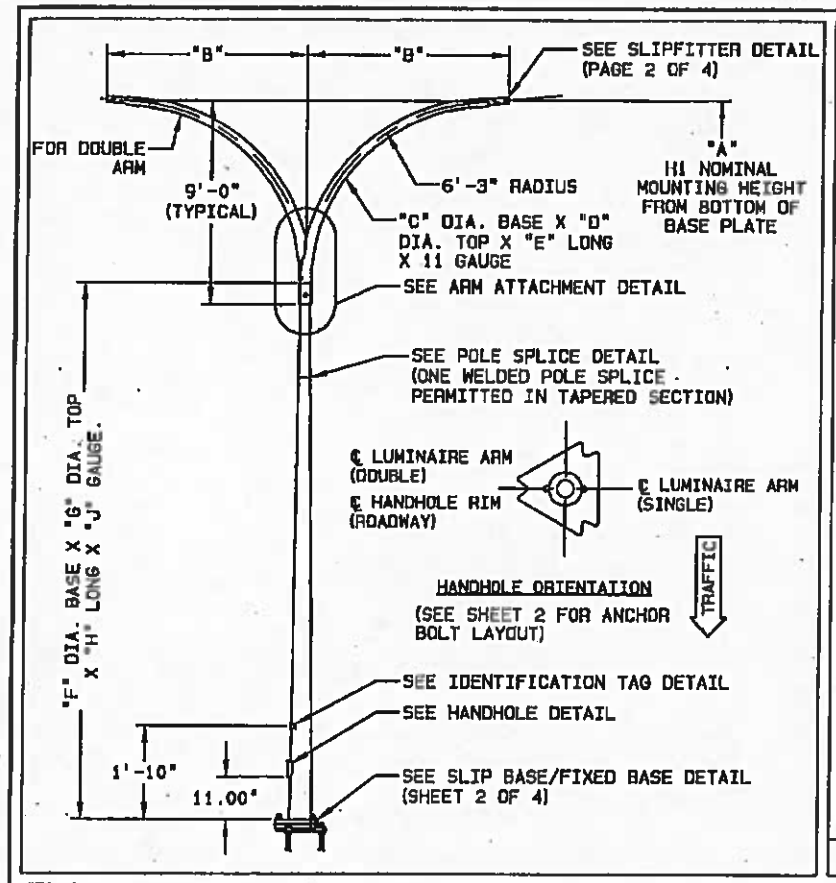

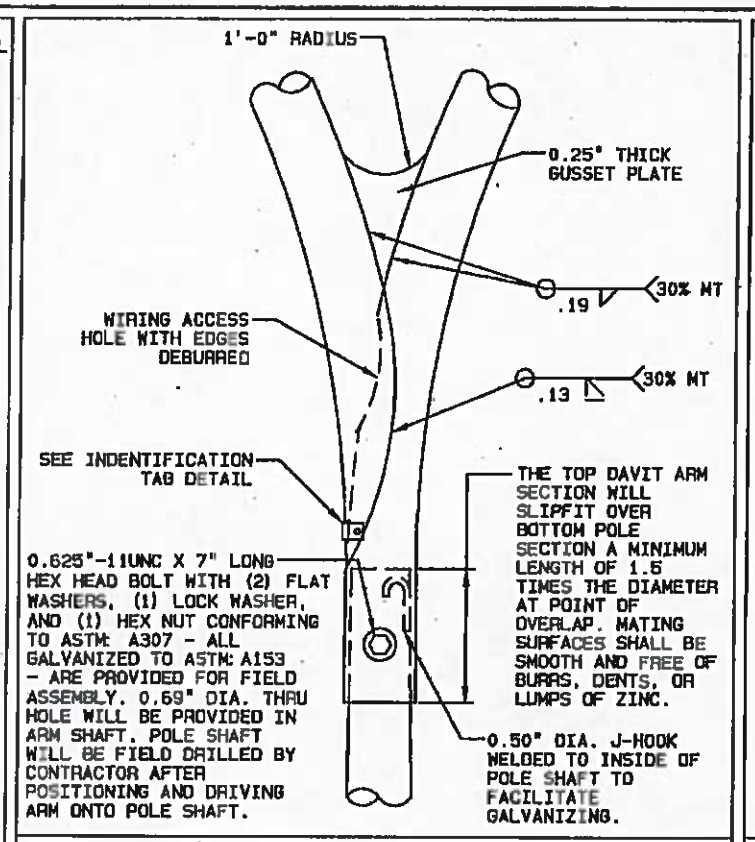

ARM ATTACHMENT DETAIL

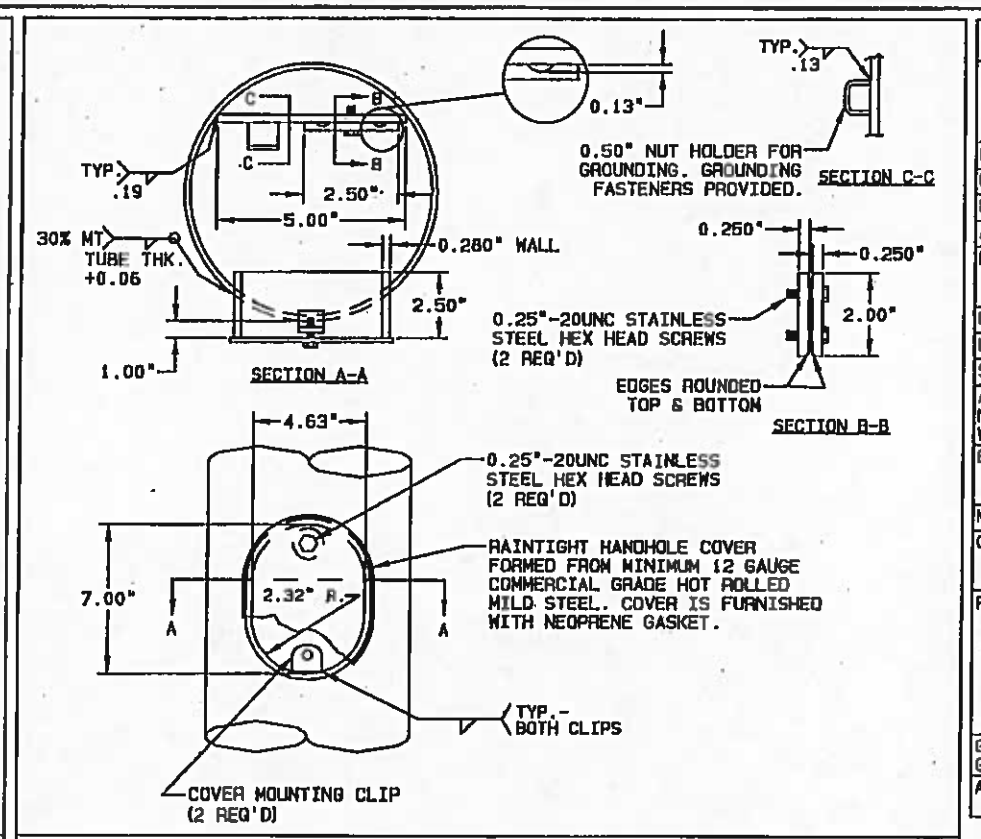

HANDHOLE DETAIL

MATERIAL DATA

COMPONENT	ASTM DESIGNATION	MIN. YIELD (KSI)
POLE & ARM SHAFTS	A595 GR. A	55
BASE PLATE	A572 GR.50	50
BOTTOM SLIP PLATE	A572 GR.50	50
ANCHOR PLATE	A572 GR.50	50
PLATE WASHERS	A36 OR A572 GR.50	36 50
KEEPER PLT-G90 COATING	A653 GR.33	
HANDHOLE RIM	A500 GR.B	42
STRUCTURAL CONN. HDWE	A325	81
ANCHOR BOLTS NUTS WASHERS	F1554 A563 GR.DH F436	105
BRNG PLT & STRAPS	A36 OR A572 GR.50	36 50
MISC. HARDWARE-SERIES 300 STAINLESS		
OTHER PLATES	A36 OR A572 GR.50	36 50
PIPE / TUBING	A501	36
	A513 GR.1015	35
	A618	50
	A500 GR.B	42
	A53 GR.B	35
GALVANIZING - STRUCTURE GALVANIZING - HARDWARE	A123 F2329	
ARM ELBOW	A513 TYPE 5 GR.1026	45

S = SINGLE ARM (D) = DOUBLE ARM

POLE AND ARM DATA

QTY.	CATALOG DESCRIPTION	H1 NOMINAL MOUNTING HEIGHT (±0'-6") "A"	ARM DESCRIPTION: ARM LENGTH "B"	ARM SHAFT: BASE O.D. "C"	ARM SHAFT: TOP O.D. "D"	ARM SHAFT: LENGTH "E"	POLE DESCRIPTION: BASE O.D. "E"	POLE: TOP O.D. "F"	POLE: SHAFT LENGTH "H"	POLE: WALL GAUGE "G"
	DS90-WA-6S (D) -30	30'-0"	6'-0"	5.41"	3.77"	11'-8"	8.05"	4.94"	22'-3"	11
	DS90-WA-8S (D) -30	30'-0"	8'-0"	5.41"	3.52"	13'-6"	8.05"	4.94"	22'-3"	11
	DS90-WA-10S (D) -30	30'-0"	10'-0"	5.41"	3.26"	15'-4"	8.05"	4.94"	22'-3"	11
	DS90-WA-12S (D) -30	30'-0"	12'-0"	5.41"	3.00"	17'-2"	8.05"	4.94"	22'-3"	11
	DS90-WA-14S (D) -30	30'-0"	14'-0"	5.41"	2.75"	19'-0"	8.05"	4.94"	22'-3"	11
	DS90-WA-16S (D) -30	30'-0"	16'-0"	5.41"	2.40"	21'-6"	8.05"	4.94"	22'-3"	11
	DS90-WA-6S (D) -35	35'-0"	6'-0"	5.41"	3.77"	11'-8"	8.75"	4.94"	27'-3"	11
	DS90-WA-8S (D) -35	35'-0"	8'-0"	5.41"	3.52"	13'-6"	8.75"	4.94"	27'-3"	11
	DS90-WA-10S (D) -35	35'-0"	10'-0"	5.41"	3.26"	15'-4"	8.75"	4.94"	27'-3"	11
	DS90-WA-12S (D) -35	35'-0"	12'-0"	5.41"	3.00"	17'-2"	8.75"	4.94"	27'-3"	11
	DS90-WA-14S (D) -35	35'-0"	14'-0"	5.41"	2.75"	19'-0"	8.75"	4.94"	27'-3"	11
	DS90-WA-16S (D) -35	35'-0"	16'-0"	5.41"	2.40"	21'-6"	8.75"	4.94"	27'-3"	11
	DS90-WA-6S (D) -40	40'-0"	6'-0"	5.41"	3.77"	11'-8"	9.45"	4.94"	32'-3"	11
	DS90-WA-8S (D) -40	40'-0"	8'-0"	5.41"	3.52"	13'-6"	9.45"	4.94"	32'-3"	11
	DS90-WA-10S (D) -40	40'-0"	10'-0"	5.41"	3.26"	15'-4"	9.45"	4.94"	32'-3"	11
	DS90-WA-12S (D) -40	40'-0"	12'-0"	5.41"	3.00"	17'-2"	9.45"	4.94"	32'-3"	11
	DS90-WA-14S (D) -40	40'-0"	14'-0"	5.41"	2.75"	19'-0"	9.45"	4.94"	32'-3"	11
	DS90-WA-16S (D) -40	40'-0"	16'-0"	5.41"	2.40"	21'-6"	9.45"	4.94"	32'-3"	11
	DS90-WA-6S (D) -50	50'-0"	6'-0"	5.41"	3.77"	11'-8"	10.85"	4.94"	42'-3"	10
	DS90-WA-8S (D) -50	50'-0"	8'-0"	5.41"	3.52"	13'-6"	10.85"	4.94"	42'-3"	10
	DS90-WA-10S (D) -50	50'-0"	10'-0"	5.41"	3.26"	15'-4"	10.85"	4.94"	42'-3"	10
	DS90-WA-12S (D) -50	50'-0"	12'-0"	5.41"	3.00"	17'-2"	10.85"	4.94"	42'-3"	10
	DS90-WA-14S (D) -50	50'-0"	14'-0"	5.41"	2.75"	19'-0"	10.85"	4.94"	42'-3"	10
	DS90-WA-16S (D) -50	50'-0"	16'-0"	5.41"	2.40"	21'-6"	10.85"	4.94"	42'-3"	10

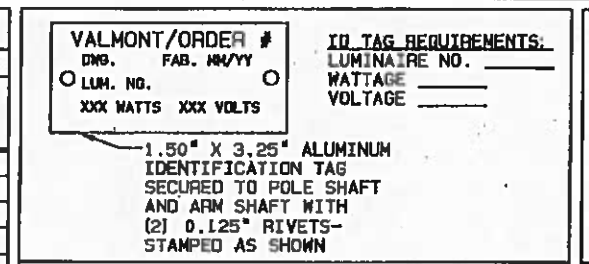

IDENTIFICATION TAG DETAIL

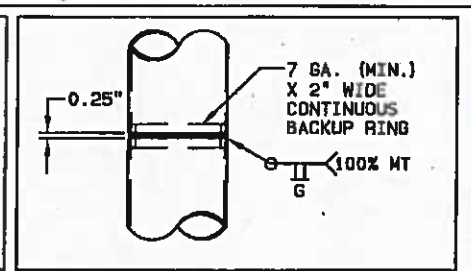

POLE SPLICE DETAIL

PLEASE PROVIDE ID TAG STAMPING REQUIREMENTS

APPROVED
Manufacturer's Pole Plan Approved For Listing As A Pre-Approved Drawing
WSDOT Bridge & Structures Office
By GB Date 2-12-15

NOTES:
1. 2009 AASHTO STANDARD SPECIFICATIONS FOR STRUCTURAL SUPPORTS FOR HIGHWAY SIGNS, LUMINAIRES, AND TRAFFIC SIGNALS.
2. 90 MPH - DESIGN WIND SPEED
3. 3.3 SQ. FT./50 LBS. - DESIGN LUMINAIRE PA/WT
4. IN THE POLE AND ARM DATA, WALL GAUGE "J" WILL CHANGE WHEN THE MOUNTING HEIGHT REQUIRED ADJUSTS THE BASE O.D. "F" TO THE FOLLOWING:
   A. 10.00" OR LESS - WALL GAUGE WILL BE 11 GA.
   B. 10.01" THRU 10.85" - WALL GAUGE WILL BE 10 GA.
   THE WALL GAUGE "J" WILL REMAIN THE SAME FOR BOTH THE SINGLE AND DOUBLE ARM CONDITIONS.
5. THE ALLOWABLE MAXIMUM SIGN AREA LOCATED 7'-0" ABOVE THE POLE BASE WILL BE 20 SQ. FT. FOR ALL ARMS AND ALL MOUNTING HEIGHTS REQUIRED EXCEPT THE FOLLOWING:
   A. IF DOUBLE 16'-0" ARMS ARE REQUIRED FOR 40'-0" MOUNTING HEIGHT WHICH WOULD ADJUST THE BASE O.D. "F" TO 10.00" OR LESS WITH 11 GAUGE WALL.
6. THE H1 DIMENSION SHALL NOT EXCEED 50'-0".
7. SLIP BASES SHALL NOT BE INSTALLED ON POLES WEIGHING MORE THAN 1000 LBS.
8. LONGITUDINAL WELD SEAM:
   WELDING PROCESS:
   HIGH FREQUENCY ELECTRIC RESISTANCE WELD.

   WELD INSPECTION:
   ALL LONGITUDINAL SEAM WELDS SHALL BE INSPECTED BY MAGNETIC PARTICLE METHOD FOR 30% OF LENGTH EXCEPT FOR SHAFT THICKNESS OVER 0.3125 TO BE ULTRASONIC METHOD. MAGNETIC PARTICLE TESTING SHALL BE PERFORMED ON BOTH SIDES OF 100% PENETRATION SEAM WELD WHEN BACKING IS NOT USED EXCEPT AT 6" CJP WELD ON SHAFT OD LESS THAN 8.75" AND FEMALE SLIP FIT SHAFT OD LESS THAN 10".

WELDING:
WELDING OF STRUCTURES SHALL BE IN ACCORDANCE WITH LATEST OF THE AWS STRUCTURAL WELDING CODE D1.1-STEEL. LONGITUDINAL SEAM WELD IS 60% MINIMUM PENETRATION EXCEPT 100% PENETRATION FOR 6 INCHES FROM END OF SECTION AT FLANGE PLATE OR BASEPLATE OR SPLICE. SLIP JOINTS SHALL BE A MINIMUM OF 1.5 X FEMALE SECTION DIA + 6 INCHES.

STEPHEN R. OSBORN
STATE OF WASHINGTON
44852
REGISTERED PROFESSIONAL ENGINEER
1/9/15

REV	DRAWN BY-DATE	CHECK BY-DATE	DESCRIPTION
H	BDB3 06/25/14	BDB3 01/08/15	REV BRIDGE ELBOW BOLTS & C8B ANCHOR BOLTS
G	BDB3 06/10/11	BDB3 06/10/11	ADD ANCHOR BOLT NUT & WASHER MATERIAL DATA
F	RDS9 02/15/11	RDS9 02/15/11	REVISED NOTES
—	JKC 04/30/03	JKC 04/30/03	— — — — — — — — — — — — — — — — — — — —

TITLE
STATE OF WASHINGTON
TYPE 1 LIGHTING STRUCTURES

VALMONT INDUSTRIES, INC. RESERVES THE RIGHT TO INSTALL VARIOUS, ENGINEER APPROVED, MATERIAL HANGING ACCOMMODATIONS TO FACILITATE THE MANUFACTURING PROCESS.

valmont
Valley, NE 68064
(402) 359-2201

PAGE NUMBER: 1 OF 4
DRAWING NUMBER: DB00654
REV: H

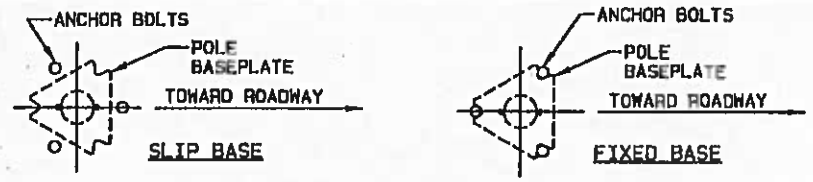

ANCHOR BOLT LAYOUT

NOTE:
1. BASEPLATE WITHOUT THE BOTTOM SLIP PLATE AND ANCHOR PLATE IS A FIXED BASE. WHERE A FIXED BASE IS REQUIRED BY PLANS OR SPECIAL PROVISIONS, ROTATE THE ANCHOR BOLT PATTERN 180° AND BOLT THE BASEPLATE DIRECTLY TO THE FOUNDATION.

DRAINAGE SLOT TABLE	
POLE I.D.	"X"
LESS THAN 8.00"	NO SLOT REQUIRED
8.00"-8.99"	0.50"
9.00"-9.99"	1.00"
10.00" +	1.50"

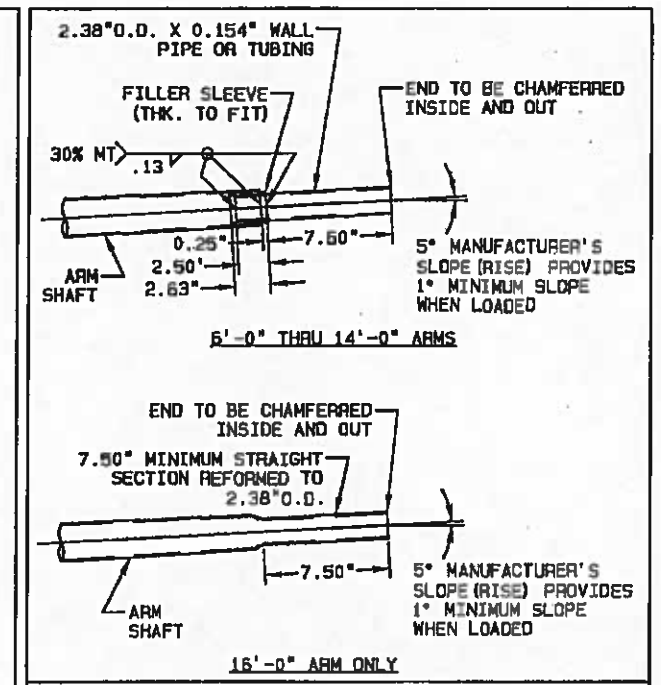

SLIPFITTER DETAIL

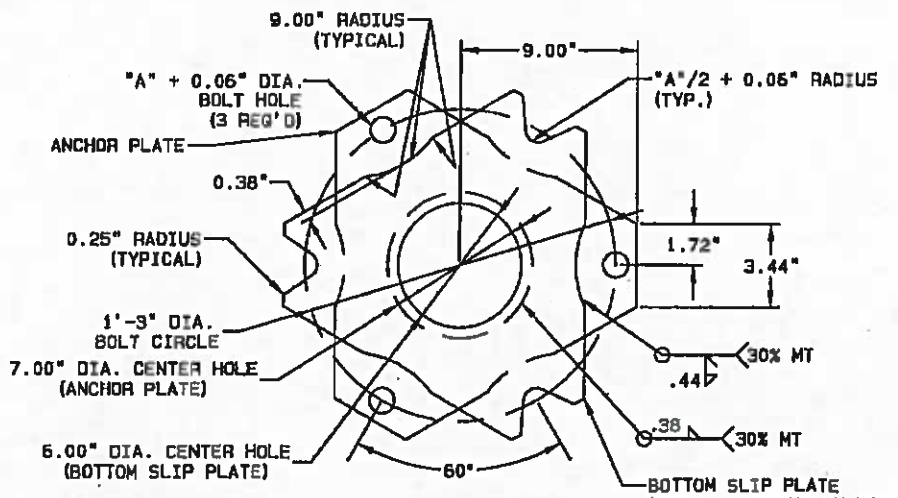

BOTTOM SLIP PLATE AND ANCHOR PLATE

T = POLE SHAFT THICKNESS
t = BACK UP RING THICKNESS

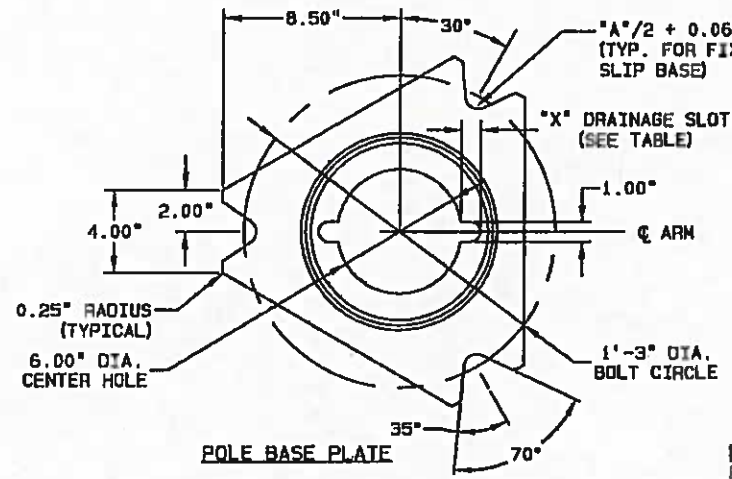

POLE BASE PLATE

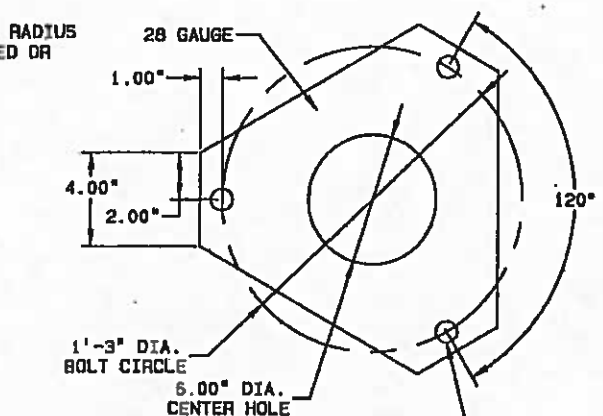

KEEPER PLATE
PLACE BETWEEN POLE BASE PLATE AND BOTTOM SLIP PLATE ON TOP OF MIDDLE WASHERS.

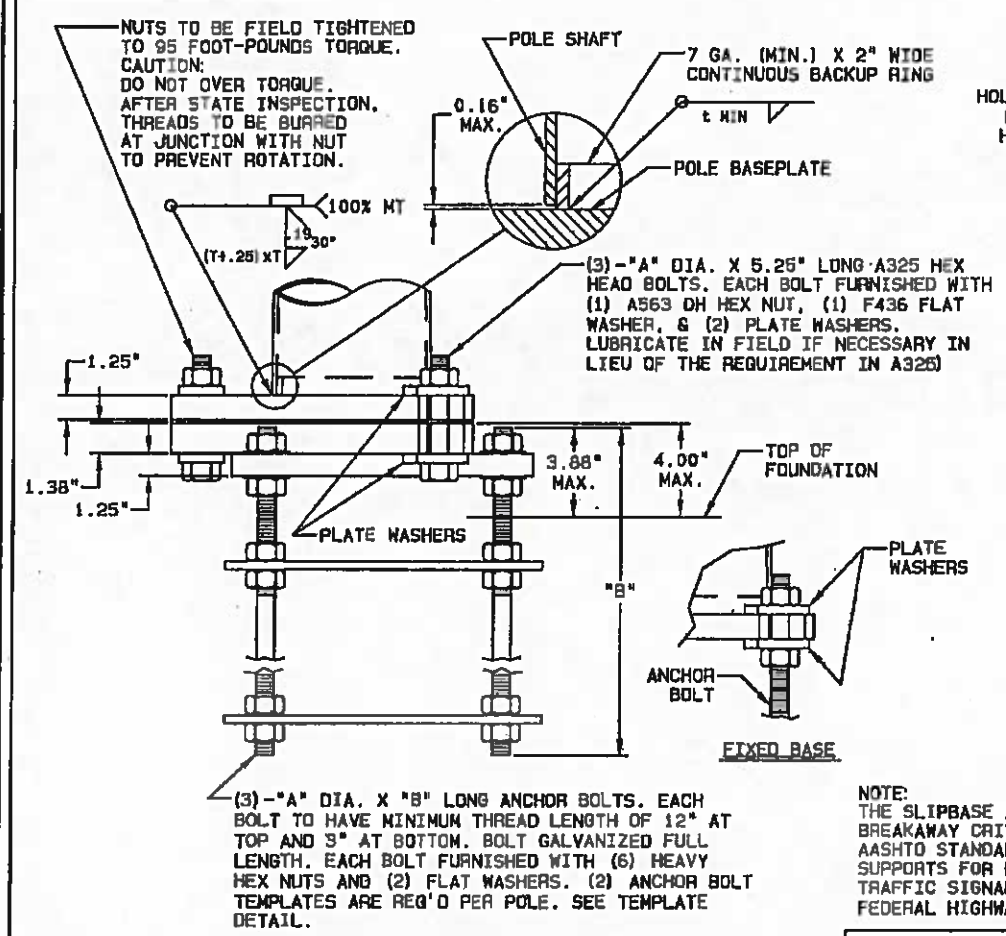

SLIP BASE ELEVATION

SLIP BASE/FIXED BASE DETAIL

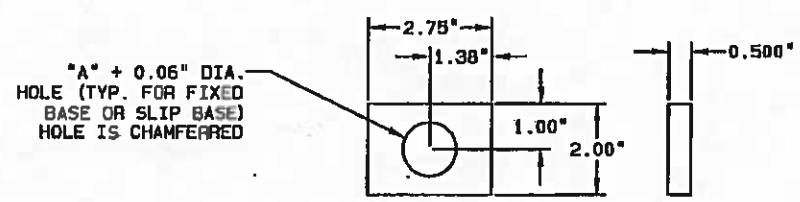

PLATE WASHER

SLIP BASE TABLE		
LUMINAIRE HEIGHT (H1)	ARM TYPE	ARM LENGTH
20'-0" THRU 50'-0"	SINGLE	6'-0" THRU 16'-0"
20'-0" THRU 45'-0"	DOUBLE	6'-0" THRU 8'-0"
POLES THAT EXCEED THE ABOVE SHALL NOT BE INSTALLED ON A SLIP BASE.		

ANCHOR BOLT TABLE			
LUMINAIRE HEIGHT (H1)	ARM TYPE	ARM LENGTH	ANCHOR BOLT "A" DIA. X "B" LENGTH
20'-0" THRU 50'-0"	SINGLE	6'-0" THRU 16'-0"	1.00" X 4'-6"
20'-0" THRU 50'-0"	DOUBLE	6'-0" THRU 8'-0"	1.00" X 4'-6"
20'-0" THRU 45'-0"	DOUBLE	10'-0" THRU 16'-0"	1.00" X 4'-6"
46'-0" THRU 50'-0"	DOUBLE	10'-0" THRU 16'-0"	1.13" X 5'-6"

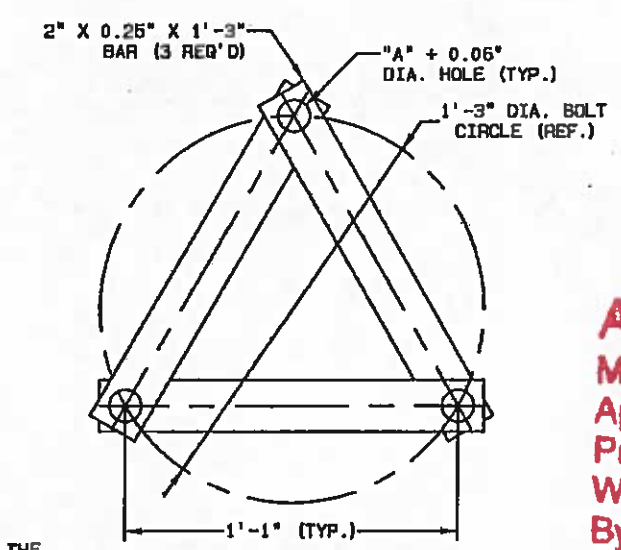

ANCHOR BOLT TEMPLATE
(2) TEMPLATES REQ'D PER POLE-STRAPS ARE SHIPPED LOOSE

NOTE:
THE SLIPBASE ASSEMBLY SHOWN CONFORMS TO THE BREAKAWAY CRITERIA SPECIFIED IN THE 2009 AASHTO STANDARD SPECIFICATIONS FOR STRUCTURAL SUPPORTS FOR HIGHWAY SIGNS, LUMINAIRES, AND TRAFFIC SIGNALS, AND HAS BEEN APPROVED BY THE FEDERAL HIGHWAY ADMINISTRATION (FHWA).

APPROVED
Manufacturer's Pole Plan
Approved For Listing As A
Pre-Approved Drawing
WSDOT Bridge & Structures Office
By GB Date 2-12-15

STEPHEN R. OSBORN
STATE OF WASHINGTON
44852
REGISTERED
PROFESSIONAL ENGINEER
1/9/15

TITLE
STATE OF WASHINGTON
TYPE 1 LIGHTING STRUCTURES

VALMONT INDUSTRIES, INC. RESERVES THE RIGHT TO INSTALL VARIOUS, ENGINEER APPROVED, MATERIAL HANDING ACCOMMODATIONS TO FACILITATE THE MANUFACTURING PROCESS.

valmont
Valley, NE 68064
(402) 359-2201

DRAWING NUMBER DB00654
REV H

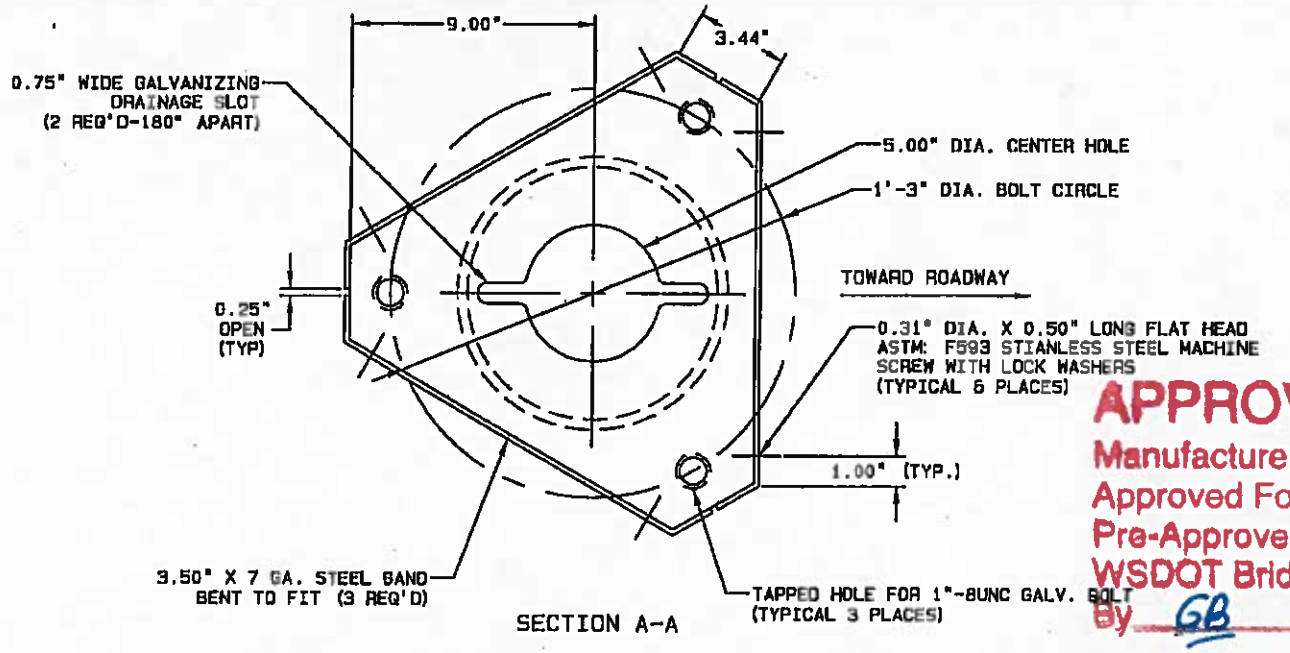

SECTION A-A

APPROVED
Manufacturer's Pole Plan
Approved For Listing As A
Pre-Approved Drawing
WSDOT Bridge & Structures Office
By GB Date 2-12-15

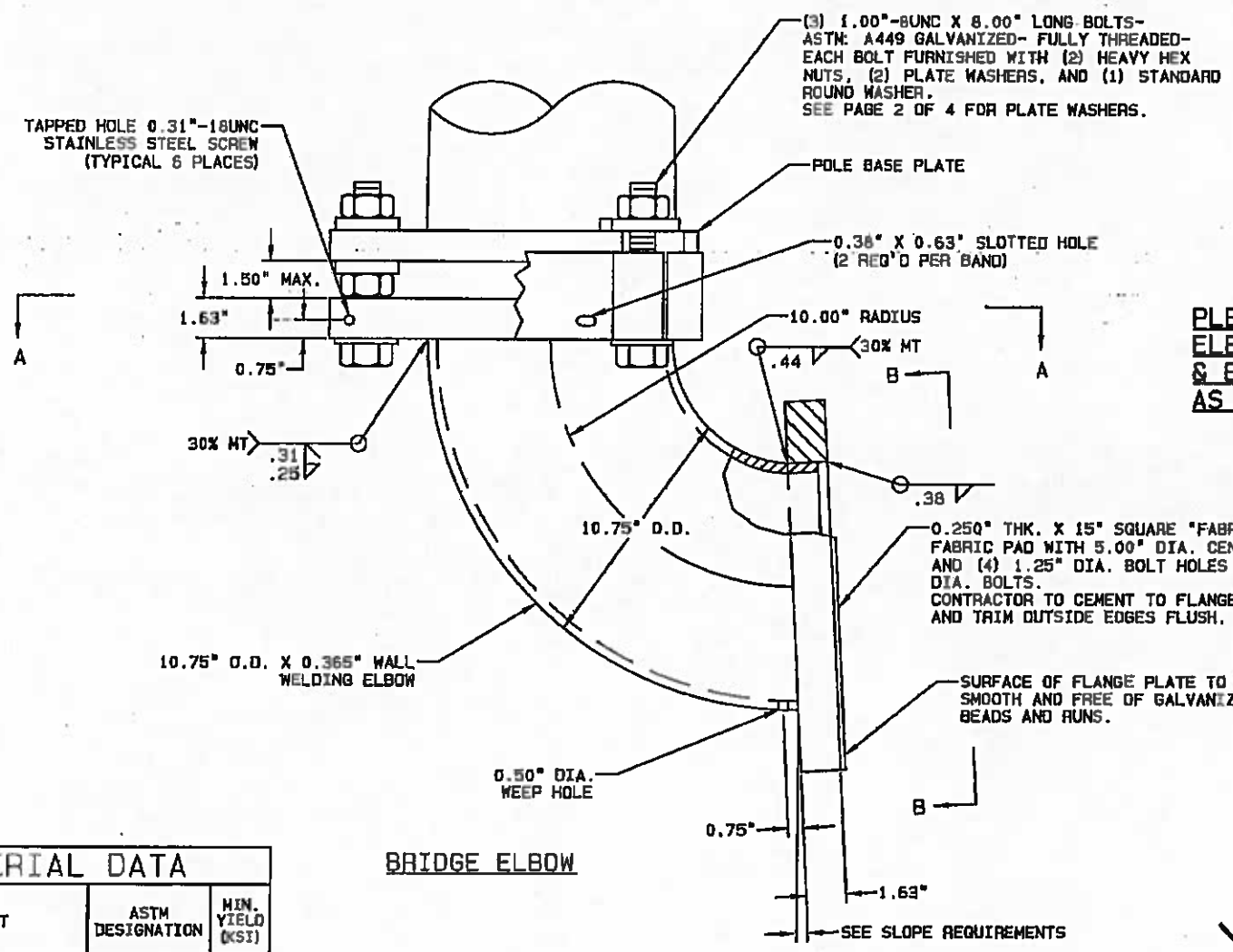

BRIDGE ELBOW

MATERIAL DATA		
COMPONENT	ASTM DESIGNATION	MIN. YIELD (KSI)
WELDING ELBOW	A234 GR.WPB	35
PLATES	A36 OR A572 GR.50	36 50
STEEL BAND	HRMS	
SEE PAGE 1 OF 4 FOR ADDITIONAL MATERIAL DATA.		

*12'-0" MAXIMUM LENGTH SINGLE ARM
8'-0" MAXIMUM LENGTH DOUBLE ARM

SEE PAGES 1 & 2 FOR DATA AND DETAILS NOT ON THIS SHEET

BRIDGE ELBOW MOUNTED POLES

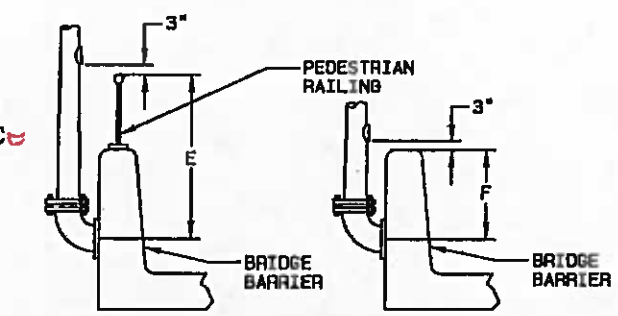

HANDHOLE ELEVATIONS
PLEASE PROVIDE AS REQUIRED:
E_____
F_____

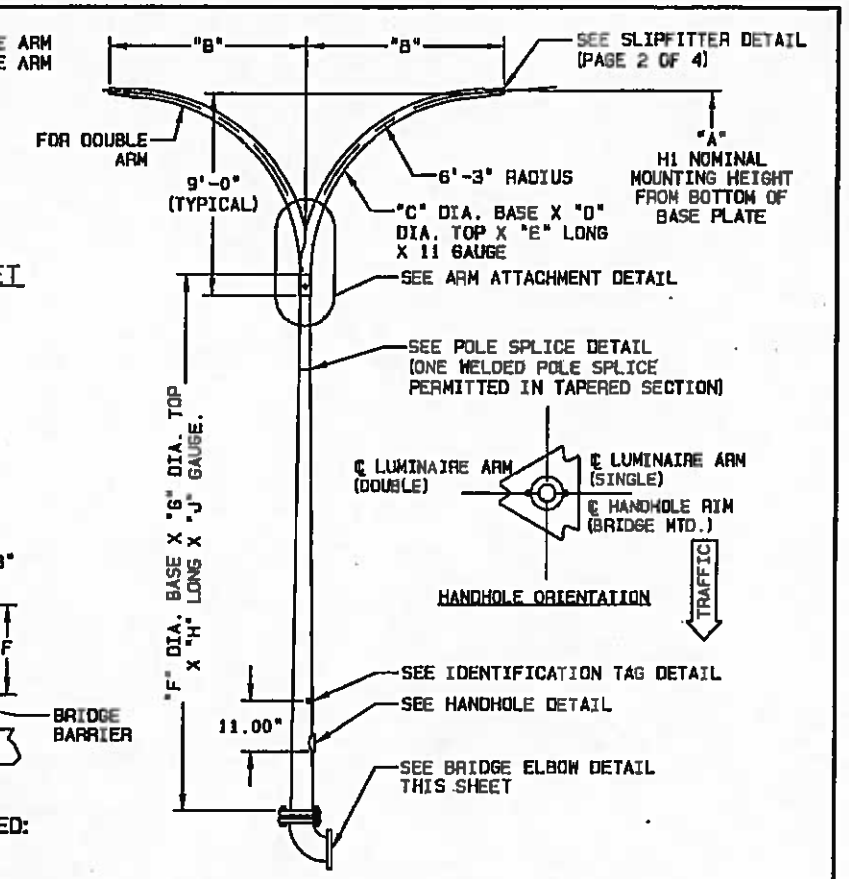

NOTE:
POLES THAT EXCEED 12'-0" MAXIMUM LENGTH FOR SINGLE ARM STRUCTURES AND 8'-0" MAXIMUM LENGTH FOR DOUBLE ARM STRUCTURES SHALL NOT BE INSTALLED ON ELBOW BRACKET.

PLEASE PROVIDE HANDHOLE ELEVATIONS AS NOTED ABOVE & ELBOW SLOPE REQUIREMENTS AS NOTED BELOW

STEPHEN R. OSBORN
STATE OF WASHINGTON
44852
REGISTERED PROFESSIONAL ENGINEER
2/12/15

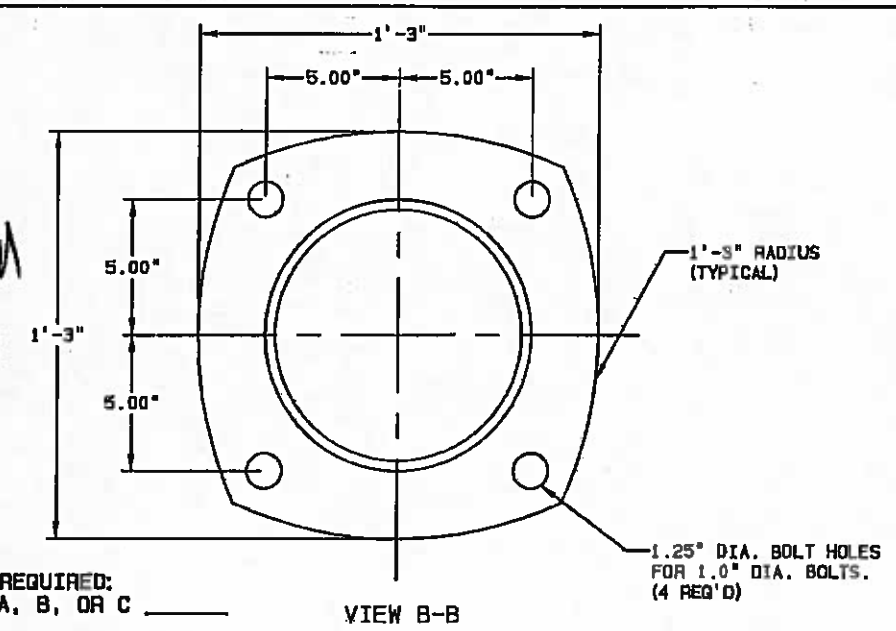

VIEW B-B

SLOPE REQUIREMENTS
PLEASE PROVIDE DATA AS REQUIRED:
1. DIRECTION OF SLOPE: A, B, OR C _____
2. DEGREE (RATIO) OF SLOPE: D _____

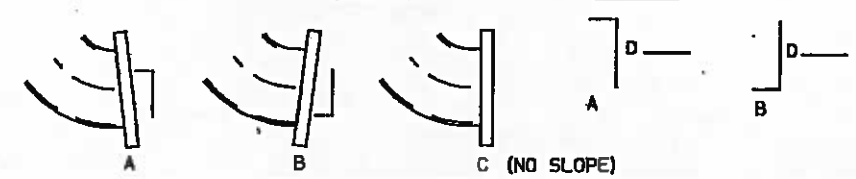

TITLE
STATE OF WASHINGTON
TYPE 1 LIGHTING STRUCTURES

VALMONT INDUSTRIES, INC. RESERVES THE RIGHT TO INSTALL VARIOUS, ENGINEER APPROVED, MATERIAL HANGING ACCOMMODATIONS TO FACILITATE THE MANUFACTURING PROCESS.

valmont
Valley, NE 68064
(402) 359-2201

PAGE NUMBER: 3 OF 4
DRAWING NUMBER DB00654
REV H

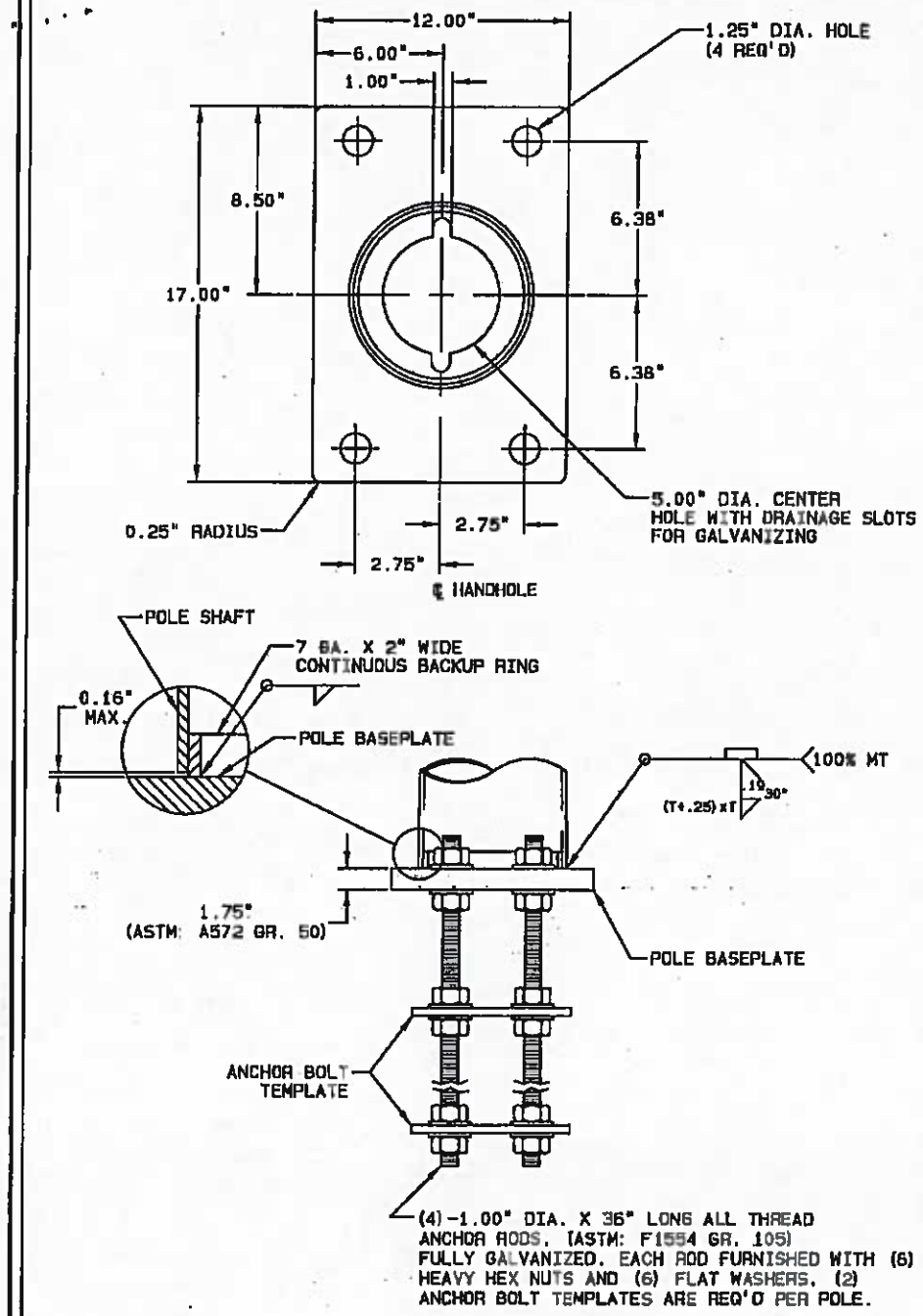

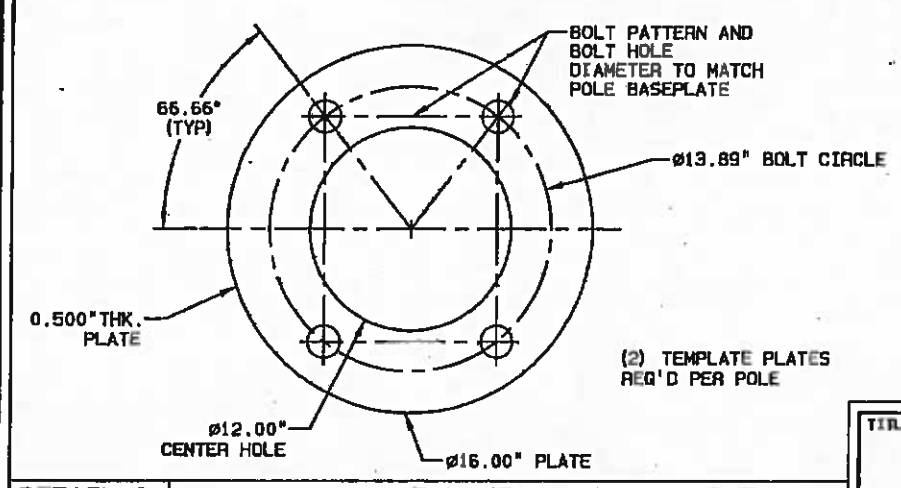

DETAIL 8 | BARRIER BASEPLATE & ANCHOR BOLTS

SEE PAGES 1 & 2 FOR DATA AND DETAILS NOT ON THIS SHEET

BARRIER MOUNTED POLES

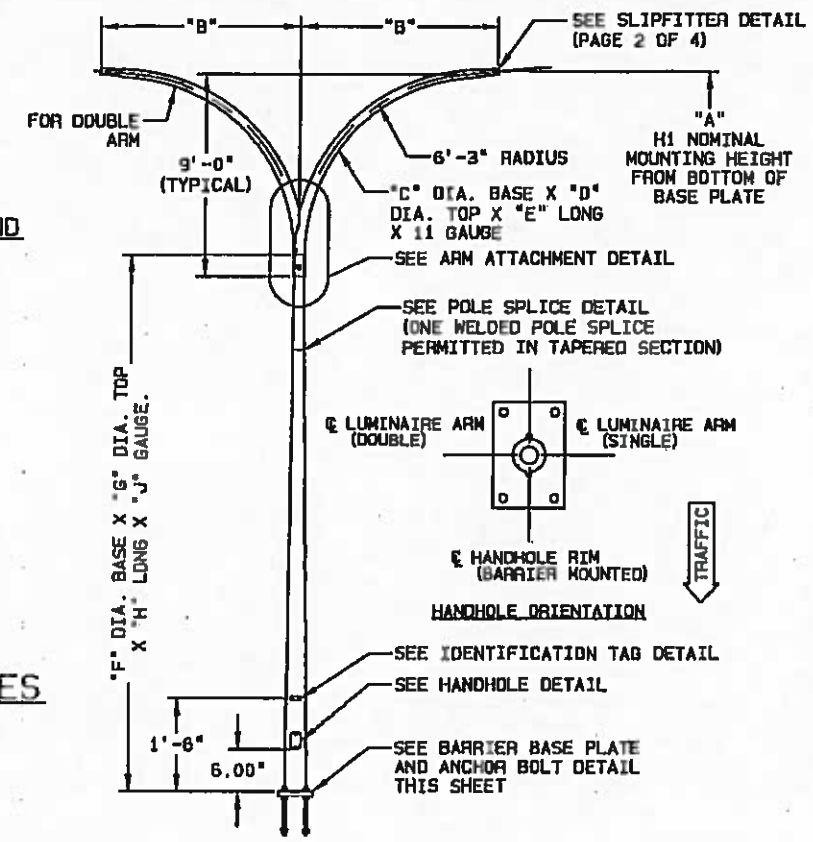

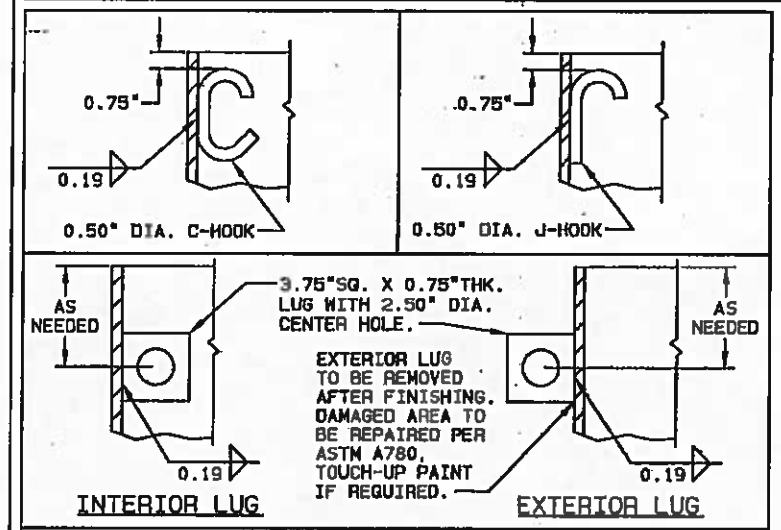

LUMINAIRE ARM - 0.75" DIA. HOLE, VISUALLY LOCATED AT END OF ARM

POLE - 1,000 LBS. OR LESS - (1) C-HOOK OR J-HOOK
1,001 LBS. THRU 2,000 LBS. - (2) C-HOOKS OR J-HOOKS
OVER 2,000 LBS. - (1) LUG

STANDARD MATERIAL HANGING ACCOMMODATIONS TO FACILITATE MANUFACTURING PROCESS

APPROVED
Manufacturer's Pole Plan
Approved For Listing As A
Pre-Approved Drawing
WSDOT Bridge & Structures Office
By GB Date 2-12-15

STEPHEN R. OSBORN
STATE OF WASHINGTON
44852
REGISTERED PROFESSIONAL ENGINEER
1/9/15

TITLE
STATE OF WASHINGTON
TYPE 1 LIGHTING STRUCTURES

VALMONT INDUSTRIES, INC. RESERVES THE RIGHT TO INSTALL VARIOUS, ENGINEER APPROVED, MATERIAL HANGING ACCOMMODATIONS TO FACILITATE THE MANUFACTURING PROCESS.

valmont
Valley, NE 68064
(402) 359-2201

PAGE NUMBER: 4 OF 4
DRAWING NUMBER: DB00654
REV: H