APPROVED
Manufacturer's Pole Plan
Approved For Listing As A
Pre-Approved Drawing
WSDOT Bridge & Structures Office
By GB Date 8-11-2011

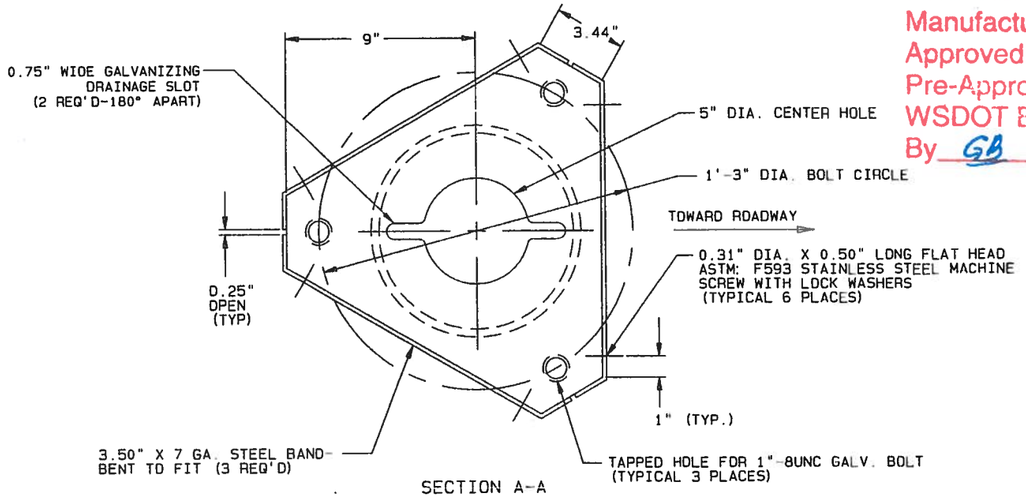

SECTION A-A

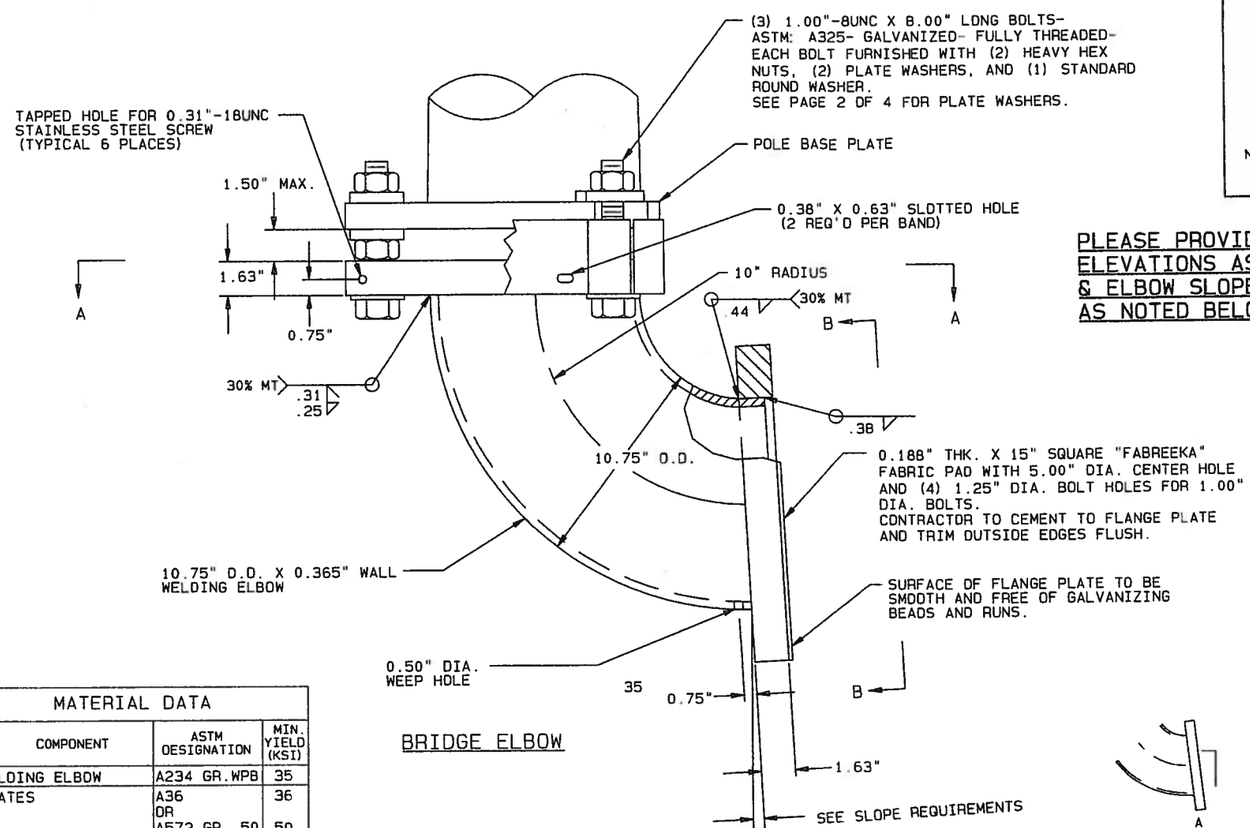

BRIDGE ELBOW

MATERIAL DATA		
COMPONENT	ASTM DESIGNATION	MIN. YIELD (KSI)
WELDING ELBOW	A234 GR.WPB	35
PLATES	A36 OR A572 GR. 50	36 50
STEEL BAND	HRMS	
SEE PAGE 1 OF 4 FOR ADDITIONAL MATERIAL DATA.		

*12'-0" MAXIMUM LENGTH SINGLE ARM
8'-0" MAXIMUM LENGTH DOUBLE ARM

SEE PAGES 1 & 2 FOR DATA AND DETAILS NOT ON THIS SHEET

BRIDGE ELBOW MOUNTED POLES

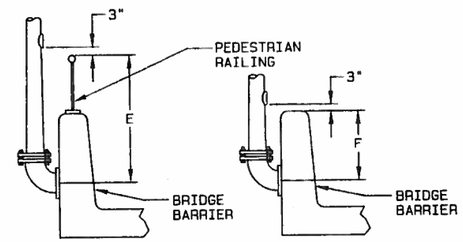

HANDHOLE ELEVATIONS
PLEASE PROVIDE AS REQUIRED:
E_____
F_____

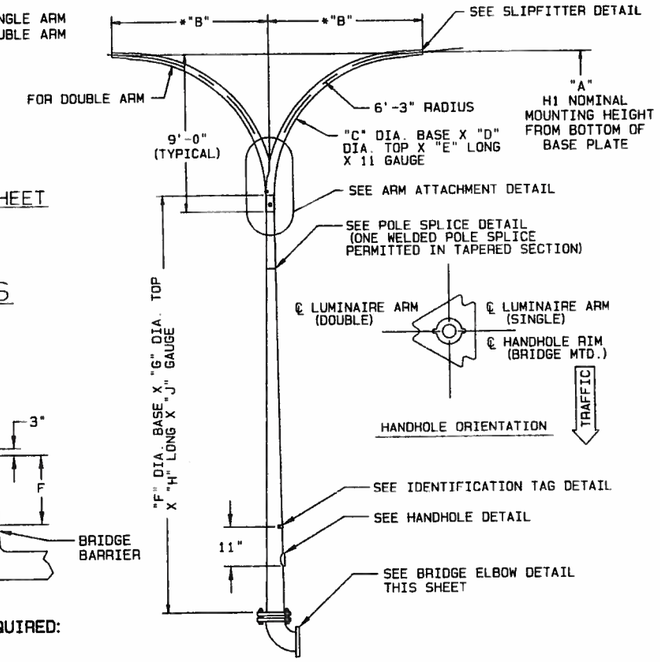

NOTE:
POLES THAT EXCEED 12'-0" MAXIMUM LENGTH FOR SINGLE ARM STRUCTURES AND 8'-0" MAXIMUM LENGTH FOR DOUBLE ARM STRUCTURES SHALL NOT BE INSTALLED ON ELBOW BRACKET.

PLEASE PROVIDE HANDHOLE ELEVATIONS AS NOTED ABOVE & ELBOW SLOPE REQUIREMENTS AS NOTED BELOW

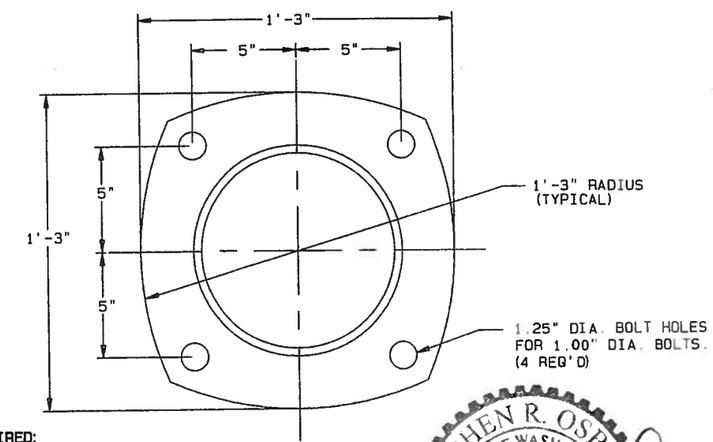

VIEW B-B

SLOPE REQUIREMENTS
PLEASE PROVIDE DATA AS REQUIRED:
1. DIRECTION OF SLOPE: A, B, OR C _____
2. DEGREE (RATIO) OF SLOPE: D _____

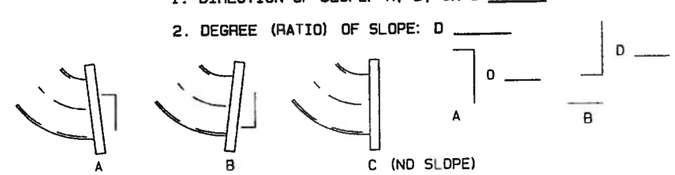

STEPHEN R. OSBORN
STATE OF WASHINGTON
REGISTERED PROFESSIONAL ENGINEER
8/9/11

TITLE	STATE OF WASHINGTON TYPE 1 LIGHTING STRUCTURES

VALMONT INDUSTRIES, INC. RESERVES THE RIGHT TO INSTALL VARIOUS, ENGINEER APPROVED, MATERIAL HANGING ACCOMMODATIONS TO FACILITATE THE MANUFACTURING PROCESS.

valmont
Valley, NE 68064
(402) 359-2201

PAGE NUMBER: 3 OF 4
DRAWING NUMBER DB00654
REV G