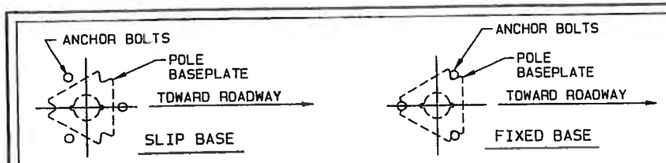

ANCHOR BOLT LAYOUT

NOTE
1. BASEPLATE WITHOUT THE BOTTOM SLIP PLATE AND ANCHOR PLATE IS A FIXED BASE. WHERE A FIXED BASE IS REQUIRED BY PLANS OR SPECIAL PROVISIONS, ROTATE THE ANCHOR BOLT PATTERN 180° AND BOLT THE BASEPLATE DIRECTLY TO THE FOUNDATION.

DRAINAGE SLOT TABLE	
POLE I.D.	"X"
LESS THAN 8.00"	NO SLOT REQUIRED
8.00"-8.99"	0.50"
9.00"-9.99"	1.00"
10.00" +	1.50"

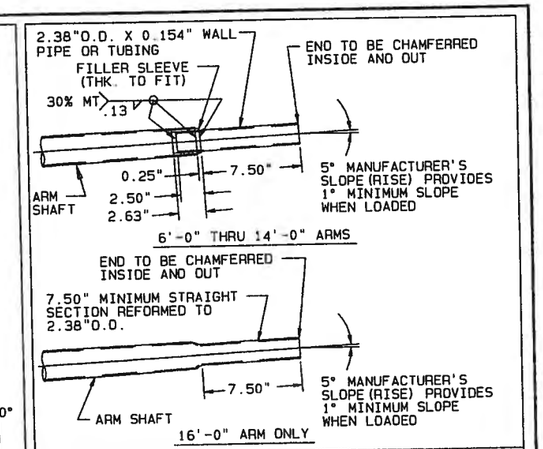

SLIPFITTER DETAIL

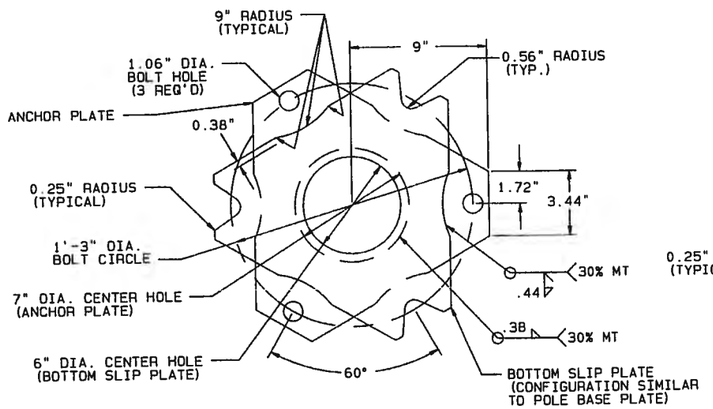

BOTTOM SLIP PLATE AND ANCHOR PLATE

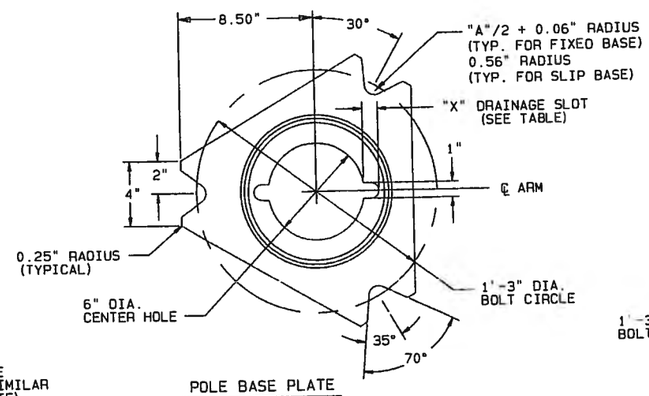

POLE BASE PLATE

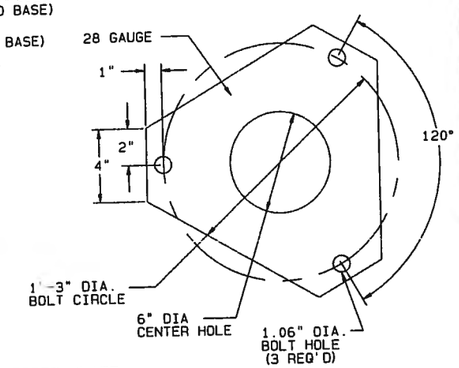

KEEPER PLATE

PLACE BETWEEN POLE BASE PLATE AND BOTTOM SLIP PLATE ON TOP OF MIDDLE WASHERS.

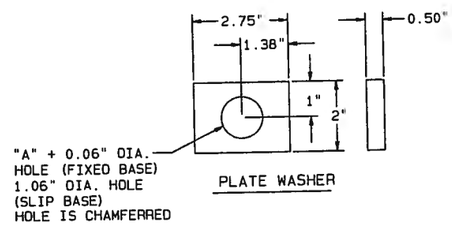

PLATE WASHER

SLIP BASE TABLE		
LUMINAIRE HEIGHT (H1)	ARM TYPE	ARM LENGTH
20'-0" THRU 50'-0"	SINGLE	6'-0" THRU 16'-0"
20'-0" THRU 45'-0"	DOUBLE	6'-0" THRU 8'-0"
POLES THAT EXCEED THE ABOVE SHALL NOT BE INSTALLED ON A SLIP BASE.		

ANCHOR BOLT TABLE			
LUMINAIRE HEIGHT (H1)	ARM TYPE	ARM LENGTH	ANCHOR BOLT "A" DIA. X "B" LENGTH
20'-0" THRU 50'-0"	SINGLE	6'-0" THRU 16'-0"	1.00" X 4'-6"
20'-0" THRU 50'-0"	DOUBLE	6'-0" THRU 8'-0"	1.00" X 4'-6"
20'-0" THRU 45'-0"	DOUBLE	10'-0" THRU 16'-0"	1.00" X 4'-6"
46'-0" THRU 50'-0"	DOUBLE	10'-0" THRU 16'-0"	1.13" X 5'-6"

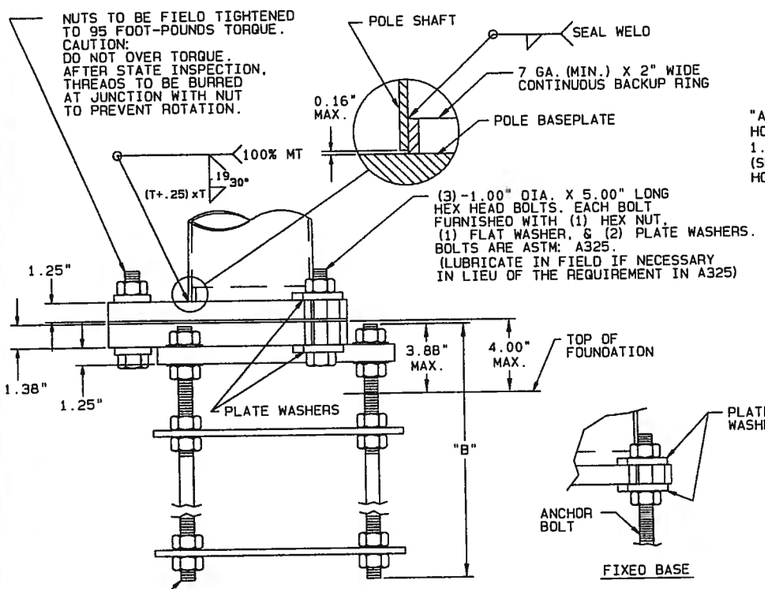

SLIP BASE ELEVATION

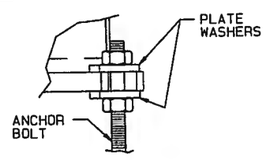

FIXED BASE

NOTE:
THE SLIPBASE ASSEMBLY SHOWN CONFORMS TO THE BREAKAWAY CRITERIA SPECIFIED IN THE 2009 AASHTO STANDARD SPECIFICATIONS FOR STRUCTURAL SUPPORTS FOR HIGHWAY SIGNS, LUMINAIRES, AND TRAFFIC SIGNALS, AND HAS BEEN APPROVED BY THE FEDERAL HIGHWAY ADMINISTRATION (FHWA).

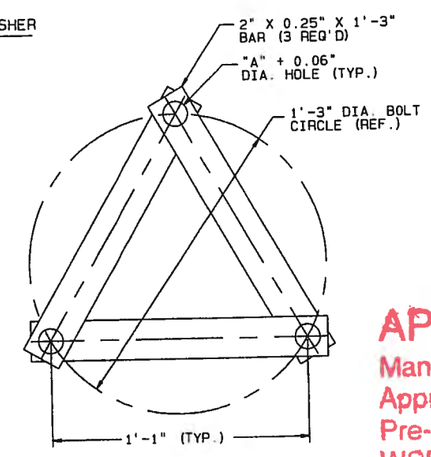

ANCHOR BOLT TEMPLATE

(2) TEMPLATES REQ'D PER POLE-STRAPS ARE SHIPPED LOOSE

SLIP BASE/FIXED BASE DETAIL

APPROVED
Manufacturer's Pole Plan
Approved For Listing As A
Pre-Approved Drawing
WSDOT Bridge & Structures Office
By GB Date 8-11-2011

STEPHEN R. OSBORN
STATE OF WASHINGTON
REGISTERED PROFESSIONAL ENGINEER
8/9/11

TITLE
STATE OF WASHINGTON
TYPE 1 LIGHTING STRUCTURES

VALMONT INDUSTRIES, INC. RESERVES THE RIGHT TO INSTALL VARIOUS, ENGINEER APPROVED, MATERIAL HANDLING ACCOMMODATIONS TO FACILITATE THE MANUFACTURING PROCESS.

valmont
Valley, NE 68064
(402) 359-2201

PAGE NUMBER 2 OF 4
DRAWING NUMBER DB00654
REV G