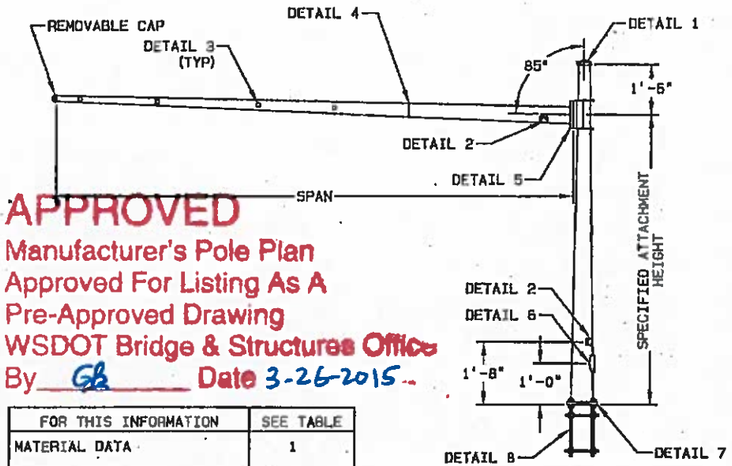

APPROVED
Manufacturer's Pole Plan
Approved For Listing As A
Pre-Approved Drawing
WSDOT Bridge & Structures Office
By GB Date 3-26-2015

FOR THIS INFORMATION	SEE TABLE
MATERIAL DATA	1
ANCHOR BOLTS & BASE PLATE	2
POLE & SIGNAL ARM TUBES	2

WASHINGTON POLE TYPE II

NOTE:
TO ACHIEVE A 30'0" MOUNTING HEIGHT USING TYPE J LUMINAIRE ARM SEE DETAIL 15

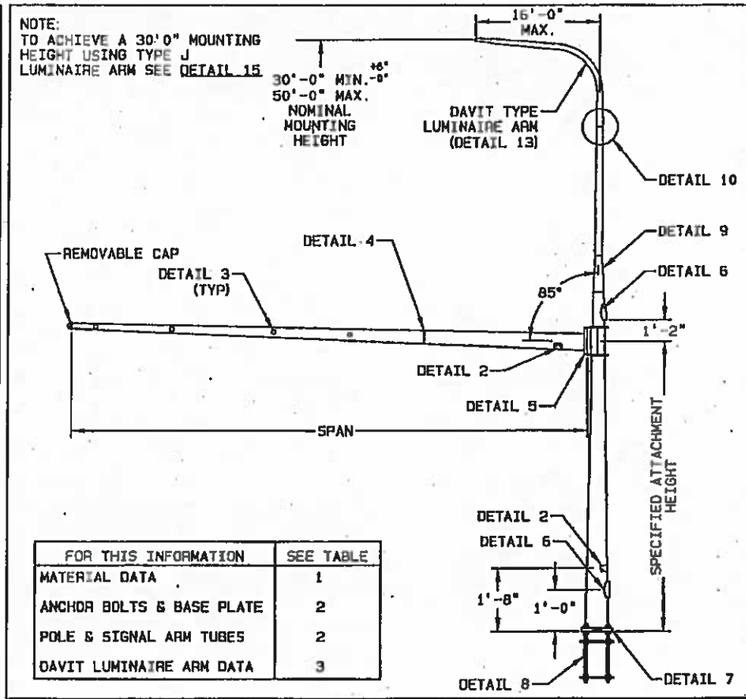

FOR THIS INFORMATION	SEE TABLE
MATERIAL DATA	1
ANCHOR BOLTS & BASE PLATE	2
POLE & SIGNAL ARM TUBES	2
DAVIT LUMINAIRE ARM DATA	3

WASHINGTON POLE TYPE III-J

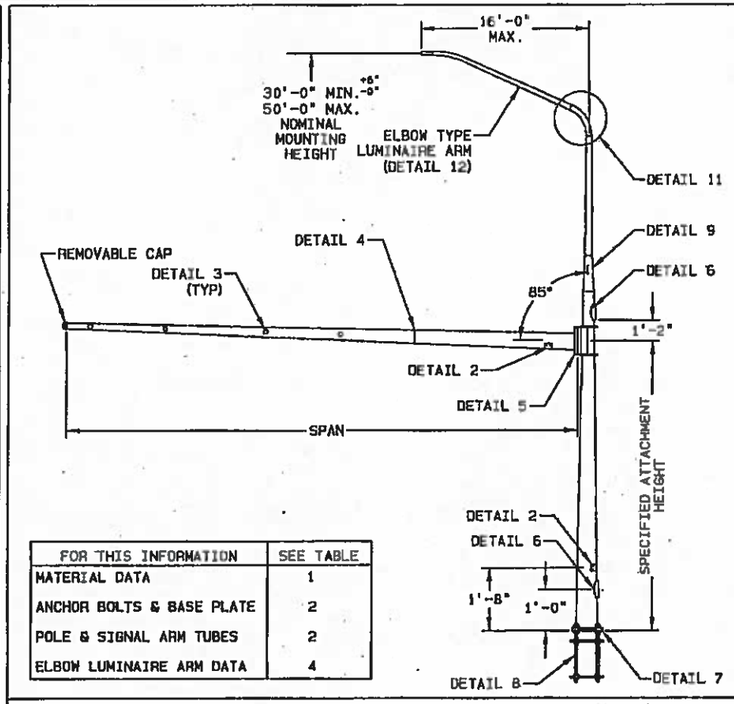

FOR THIS INFORMATION	SEE TABLE
MATERIAL DATA	1
ANCHOR BOLTS & BASE PLATE	2
POLE & SIGNAL ARM TUBES	2
ELBOW LUMINAIRE ARM DATA	4

WASHINGTON POLE TYPE III-T

DESIGN CRITERIA:
2009 AASHTO STANDARD SPECIFICATION FOR STRUCTURAL SUPPORTS FOR HIGHWAY SIGNS, LUMINAIRES, AND TRAFFIC SIGNALS.
-50 YEAR DESIGN LIFE/RECURRENCE INTERVAL
-FATIGUE CATEGORY III
-GALLOPING & TRUCK-INDUCED FATIGUE INCLUDED

WIND VELOCITY:
90 MPH ISOTACH.

MAXIMUM TRUCK-INDUCED FATIGUE
65 MPH

CAFL AT CRITICAL CONNECTIONS
-POLE TO BASE PLATE CONNECTION = D
-ARM TO SIMPLEX PLATE CONNECTION = D
-SIMPLEX GUSSETS = ET
-POLE WALL AT SIMPLEX GUSSET = E
-POLE SHAFT = B'

LONGITUDINAL WELD SEAM:

WELDING PROCESS:
HYBRID LBW/GMAW. (POLE/SIGNAL ARM SHAFT (0.2500, 0.3125 & 0.3750)
HIGH FREQUENCY ELECTRIC RESISTANCE WELD. (POLE/SIGNAL ARM SHAFT (5 GA., 7 GA. & 11 GA.)

WELD INSPECTION:
ALL LONGITUDINAL SEAM WELDS SHALL BE INSPECTED BY MAGNETIC PARTICLE METHOD FOR 30% OF LENGTH EXCEPT FOR SHAFT THICKNESS OVER 0.3125 TO BE ULTRASONIC METHOD. MAGNETIC PARTICLE TESTING SHALL BE PERFORMED ON BOTH SIDES OF 100% PENETRATION SEAM WELD WHEN BACKING IS NOT USED EXCEPT AT 6" CJP WELD ON SHAFT OD LESS THAN 8.75" AND FEMALE SLIP FIT SHAFT OD LESS THAN 10".

WELDING:
WELDING OF STRUCTURES SHALL BE IN ACCORDANCE WITH LATEST OF THE AWS STRUCTURAL WELDING CODE D1.1-STEEL. LONGITUDINAL SEAM WELD IS 60% MINIMUM PENETRATION EXCEPT 100% PENETRATION FOR 6 INCHES FROM END OF SECTION AT FLANGE PLATE OR BASEPLATE. SLIP JOINTS SHALL BE A MINIMUM OF 1.5 X FEMALE SECTION DIA + 6 INCHES.

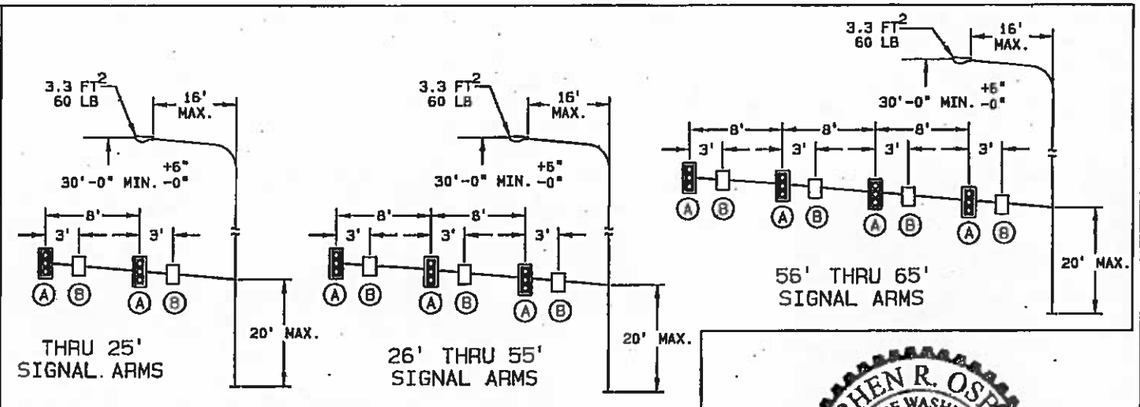

	PROJ. AREA (FT²)	WEIGHT (LBS)	DEVICE	DESCRIPTION
(A) SIGNAL	12"-3 SEC. SIGNAL WITH BACKPLATES	9.20	60	
(B) SIGN	30" X 24" DIRECTIONAL SIGN	5.00	60	

MAXIMUM MAST ARM XYZ VALUES LISTED ON PAGE 2 OF 4 INCLUDE SIGNS AND SIGNALS.
LUMINAIRE ARM XYZ IS BASED ON A 16'-0" SPAN.
TOTAL STRUCTURE XYZ VALUE IS BASED ON ADDING THE MAXIMUM MAST ARM XYZ VALUE & LUMINAIRE ARM XYZ VALUE TOGETHER.

LOADING INFORMATION

STEPHEN R. OSBORN
STATE OF WASHINGTON
22852
REGISTERED PROFESSIONAL ENGINEER
3/2/15

TABLE 1: MATERIAL DATA

COMPONENT	ASTM DESIGNATION	MIN YIELD (KSI)
POLE AND SIGNAL ARM TAPERED TUBES	A595 GR. A OR A572	55
BASE PLATE	A36 OR A572 GR. 50	36 50
SIGNAL ARM ATTACHMENT PLATES AND GUSSET PLATES	A36 OR A572 GR. 50	36 50
SIGNAL ARM CONN. BOLTS	A325	81
LUMINAIRE ARM	A595 GR. A	55
POLE TOP EXTENSION	A595 GR. A	55
REDUCING CONE	A595 GR. A OR A1011-50 HSLAS CLASS 2	55 50
HANDHOLE RIM	A500 GR. B OR C A513 GR. 1035 OR 1040 *WITH FURTHER RESTRICTION ON MINIMUM YIELD STRENGTH HELD TO 50 KSI.	50* 50
PIPE / TUBING	A53 GR. B A501 A513 GR. 1015 A618 A500 GR. B	35 36 35 50 42
ELBOW	A513 TYPE 5 GR. 1026	45
ANCHOR BOLTS	F1554	105
ANCHOR BOLT NUTS	ASTM A563 GR. DH	--
ANCHOR BOLT WASHERS	ASTM F436	--
GALVANIZING - STRUCTURE	A123	--
GALVANIZING - HARDWARE	F2329	--

REV	DRAWN BY-DATE	CHECK BY-DATE	DESCRIPTION
U	BDB3 02/27/15	BDB3 02/27/15	REVISED XYZ VALUES TO 3 SEPARATE COLUMNS
T	JH84 10/27/14	BDB3 01/08/15	ADDED 30'-0" MH DAVIT LUM ARM DESIGN
R	BDB3 07/22/11	BDB3 07/22/11	ADDED HANGING DETAIL / HLAW WELD NOTES
—	JKC 05/08/02	JKC 05/10/02	— — — — — — — — — — — — — — — —

TITLE STATE OF WASHINGTON
TRAFFIC SIGNAL STRUCTURES

VALMONT INDUSTRIES, INC. RESERVES THE RIGHT TO INSTALL VARIOUS, ENGINEER APPROVED, MATERIAL HANGING ACCOMMODATIONS TO FACILITATE THE MANUFACTURING PROCESS.

valmont
Valley, NE 68064
(402) 359-2201

DRAWING NUMBER DB00625 REV U

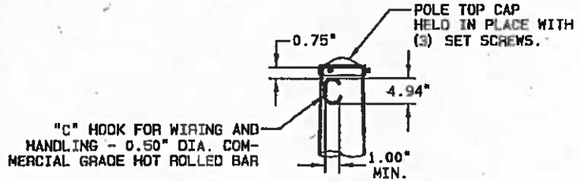

DETAIL 1 — POLE TOP

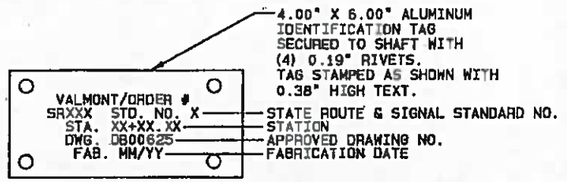

POLE SHAFT: LOCATED AS SHOWN ON PAGE 1 OF 4.

SINGLE PIECE MAST ARM: LOCATED 8" FROM BASE END ON BOTTOM ℄.

TWO PIECE MAST ARM: BASE SECTION - LOCATED 8" FROM BASE END ON BOTTOM ℄.
END SECTION - LOCATED 6" FROM SMALL END ON BOTTOM ℄.

LUMINAIRE ARM: LOCATED AS SHOWN ON DETAILS 12 & 13, PAGE 3 OF 4.

DETAIL 2 — IDENTIFICATION TAG

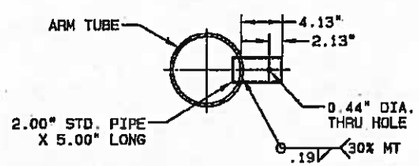

DETAIL 3 — SIGNAL ARM TENON

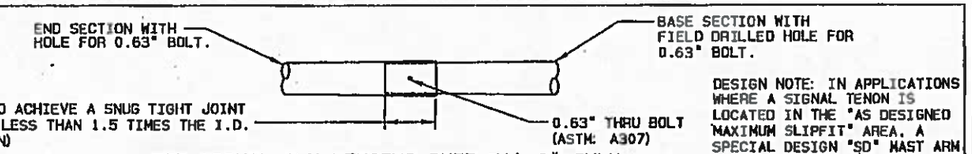

DESIGN NOTE: IN APPLICATIONS WHERE A SIGNAL TENON IS LOCATED IN THE "AS DESIGNED MAXIMUM SLIPFIT" AREA, A SPECIAL DESIGN "SD" MAST ARM WILL BE REQUIRED.

FOR SIGNAL ARM LENGTHS OVER 51'-0" ONLY

ARM SPAN (FT)	BASE SECTION			END SECTION			AS DESIGNED MAXIMUM SLIPFIT (IN)
	SMALL END O.D. (IN)	LENGTH (FT)	GAUGE OR THK. (IN)	LARGE END O.D. (IN)	LENGTH (FT)	GAUGE OR THK. (IN)	
51.00 - 55.00	11.25	12.50	5 GA.	11.97	41.05 - 45.05	7 GA.	36.79
56.00 - 65.00	12.27	19.50	0.250	13.00	39.18 - 48.18	7 GA.	38.33

DETAIL 4 — SIGNAL ARM SLIP JOINT

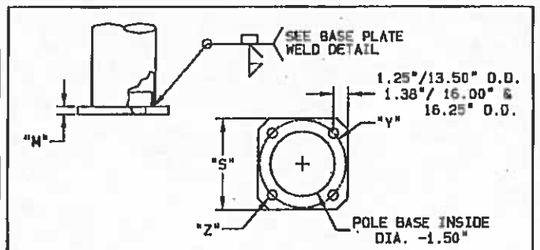

DETAIL 7 — POLE BASE

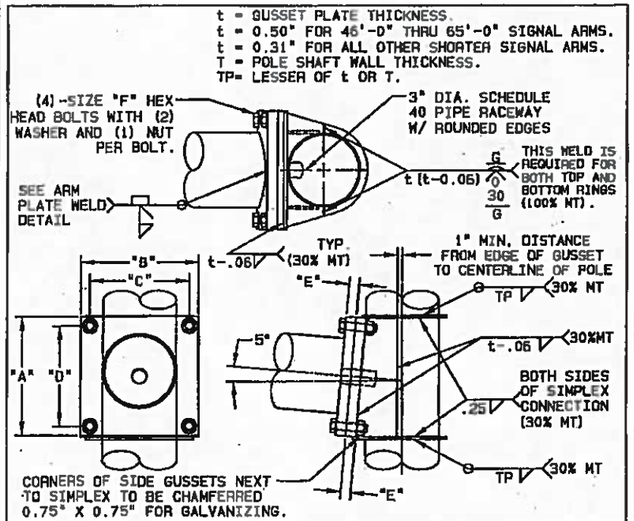

DETAIL 5 — SIGNAL ARM ATTACHMENT

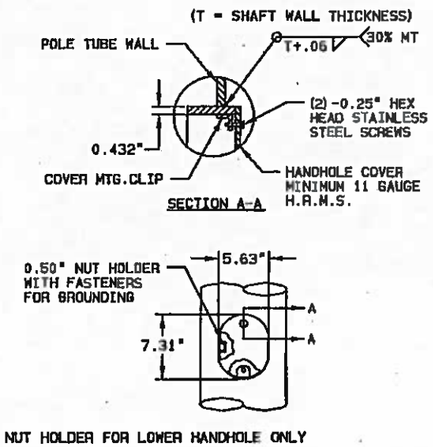

DETAIL 6 — HANDHOLE

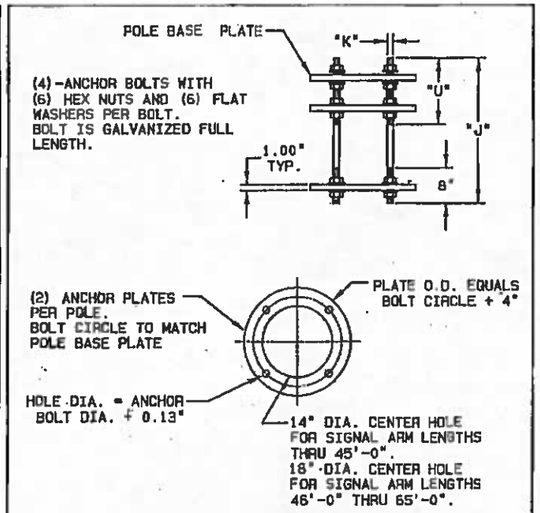

DETAIL 8 — ANCHOR BOLTS & ANCHOR PLATES

APPROVED
Manufacturer's Pole Plan Approved For Listing As A Pre-Approved Drawing
WSDOT Bridge & Structures Office
By GB Date 3-26-2015

TABLE 2: POLE AND SIGNAL ARM DATA

POLE CLASS	POLE TUBE				BASE PLATE				ANCHOR BOLT				SIGNAL ARM TUBE				SIGNAL ARM ATTACHMENT DATA						MAXIMUM SIGNAL MAST ARM X Y Z (FT³)	LUMINAIRE ARM X Y Z (FT³)	TOTAL STRUCTURE X Y Z (FT³)
	BASE DIA. (IN)	TOP DIA. (IN)	*MAX. LENGTH (FT)	GAUGE OR THICK (IN)	SQUARE "S" (IN)	BOLT CIRCLE "Y" (IN)	THK. "M" (IN)	HOLE "Z" (IN)	DIA. "K" (IN)	LENGTH "J" (IN)	ANCHOR PLATE O.D. (IN)	THREAD LENGTH "U" (IN)	FIXED END DIA. (IN)	FREE END DIA. (IN)	GAUGE OR THICK (IN)	SPAN (FT)	"A" (IN)	"B" (IN)	"C" (IN)	"D" (IN)	"E" (IN)	"F" (IN)			
TYPE II	13.50	10.49	21.50	0.313	18.50	18.00	1.500	1.75	1.50	60.00	22.00	18.00	7.00	THRU 3.50	7	THRU 25	20.25	20.25	16.50	16.50	1.750	1.50-6UNC X 6.00	566	N/A	566
TYPE II	13.50	10.49	21.50	0.313	18.50	18.00	1.500	1.75	1.50	60.00	22.00	18.00	10.00	6.36-5.10	7	26-35	20.25	20.25	16.50	16.50	1.750	1.50-6UNC X 6.00	1105	N/A	1105
TYPE II	13.50	10.49	21.50	0.313	18.50	18.00	1.500	1.75	1.50	60.00	22.00	18.00	11.00	5.96-4.70	7	36-45	20.25	20.25	16.50	16.50	1.750	1.50-6UNC X 6.00	1631	N/A	1531
TYPE II	16.00	12.99	21.50	0.375	22.50	22.00	2.000	2.25	2.00	60.00	26.00	18.00	13.00	6.56-6.00	7	46-50	23.75	23.75	20.00	20.00	2.000	1.50-6UNC X 6.50	1957	N/A	1957
TYPE II	16.00	12.99	21.50	0.375	22.50	22.00	2.000	2.25	2.00	60.00	26.00	18.00	13.00	6.18-5.30	DET.4	51-55	23.75	23.75	20.00	20.00	2.000	1.50-6UNC X 6.50	2297	N/A	2297
TYPE II	16.25	13.24	21.50	0.375	22.50	22.00	2.000	2.25	2.00	60.00	26.00	18.00	15.00	7.16-5.90	DET.4	56-65	23.75	23.75	20.00	20.00	2.000	1.50-6UNC X 6.50	2894	N/A	2894
TYPE III	13.50	10.42	22.00	0.313	18.50	18.00	1.500	1.75	1.50	60.00	22.00	18.00	7.00	THRU 3.50	7	THRU 25	20.25	20.25	16.50	16.50	1.750	1.50-6UNC X 6.00	566	53	619
TYPE III	13.50	10.42	22.00	0.313	18.50	18.00	1.500	1.75	1.50	60.00	22.00	18.00	10.00	6.36-5.10	7	26-35	20.25	20.25	16.50	16.50	1.750	1.50-6UNC X 6.00	1105	53	1158
TYPE III	13.50	10.42	22.00	0.313	18.50	18.00	1.500	1.75	1.50	60.00	22.00	18.00	11.00	5.96-4.70	7	36-45	20.25	20.25	16.50	16.50	1.750	1.50-6UNC X 6.00	1531	53	1584
TYPE III	16.00	12.92	22.00	0.375	22.50	22.00	2.000	2.25	2.00	60.00	26.00	18.00	13.00	6.56-6.00	7	46-50	23.75	23.75	20.00	20.00	2.000	1.50-6UNC X 6.50	1957	53	2010
TYPE III	16.00	12.92	22.00	0.375	22.50	22.00	2.000	2.25	2.00	60.00	26.00	18.00	13.00	6.18-5.30	DET.4	51-55	23.75	23.75	20.00	20.00	2.000	1.50-6UNC X 6.50	2297	53	2350
TYPE III	16.25	13.17	22.00	0.375	22.50	22.00	2.000	2.25	2.00	60.00	26.00	18.00	15.00	7.16-5.90	DET.4	56-65	23.75	23.75	20.00	20.00	2.000	1.50-6UNC X 6.50	2894	53	2947

* 30'-0" MOUNTING HEIGHT POLE TUBE LENGTH FOR TYPE III STRUCTURES IS 21'-2". SEE DETAIL 15

STEPHEN R. OSBORN — STATE OF WASHINGTON — 44852 — REGISTERED PROFESSIONAL ENGINEER
3/2/15

TITLE: STATE OF WASHINGTON
TRAFFIC SIGNAL STRUCTURES

VALMONT INDUSTRIES, INC. RESERVES THE RIGHT TO INSTALL VARIOUS, ENGINEER APPROVED, MATERIAL HANGING ACCOMMODATIONS TO FACILITATE THE MANUFACTURING PROCESS.

valmont
Valley, NE 68064
(402) 359-2201

DRAWING NUMBER DB00625 REV U

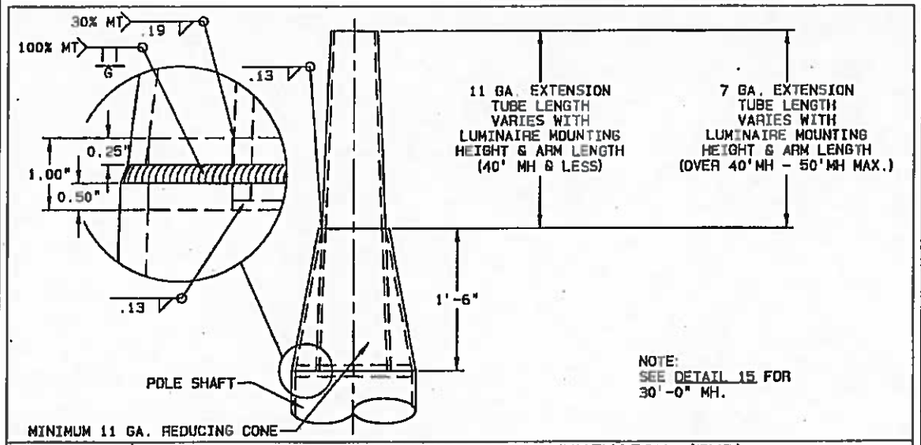

DETAIL 9 | LUMINAIRE CONE EXTENSION (TYP)

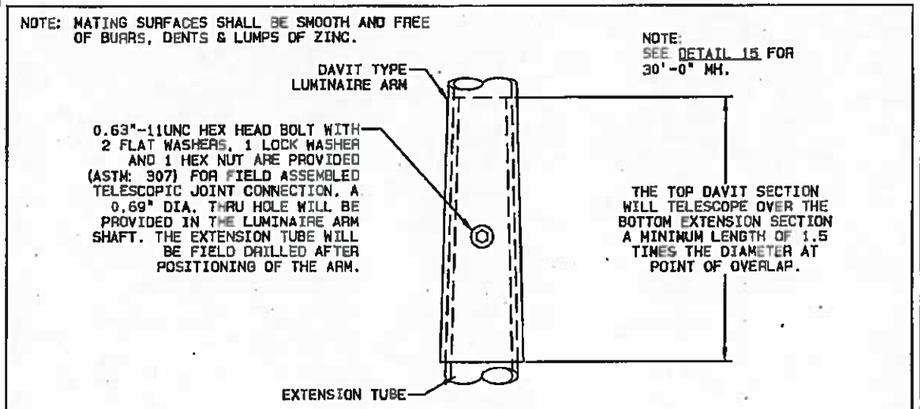

DETAIL 10 | DAVIT TYPE TELESCOPIC JOINT

TABLE 3: DAVIT TYPE LUMINAIRE ARM DATA

SPAN (FT)	BASE O.D. (IN)	FREE END (IN)	LONG (FT)	GAUGE
6	5.41	3.77	11.55	11
8	5.41	3.52	13.50	11
10	5.41	3.26	15.39	11
12	5.41	3.00	17.16	11
14	5.41	2.75	19.00	11
16	5.41	2.40	21.50	11
SEE TABLE 5 FOR 30'-0" MOUNTING HEIGHT DAVIT ARM DATA				

TABLE 4: ELBOW TYPE LUMINAIRE ARM DATA

SPAN (FT)	RISE "A" (FT)	RISE "B" (FT)
6	1.98	2.83
8	3.13	4.00
10	4.28	5.08
12	5.44	6.42
14	6.59	7.58
*14	4.09	5.08
16	7.75	8.75
*16	5.33	6.33
*FOR 30'-0" MOUNTING HEIGHT		

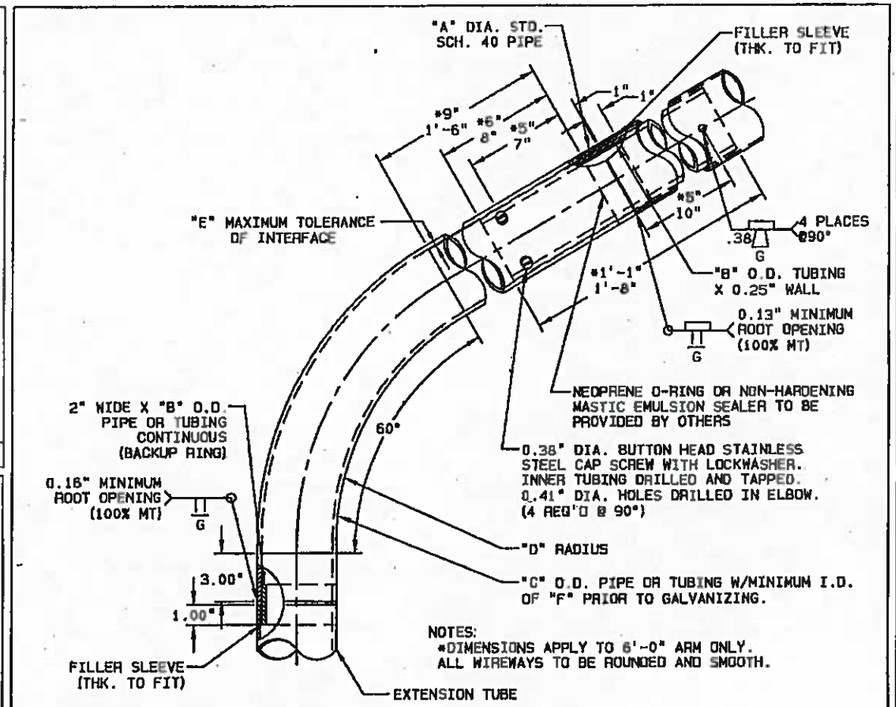

ARM SCHEDULE

ARM LENGTHS (FT)	"A" (IN)	"B" (IN)	"C" (IN)	"D" (FT)	"E" (IN)	"F" (IN)
6 THROUGH 10	3.50	3.50	4.00	1.00	0.031	3.537
12 THROUGH 16	4.00	4.00	4.50	1.25	0.015	4.035

DETAIL 11 | ELBOW TYPE ARM ATTACHMENT

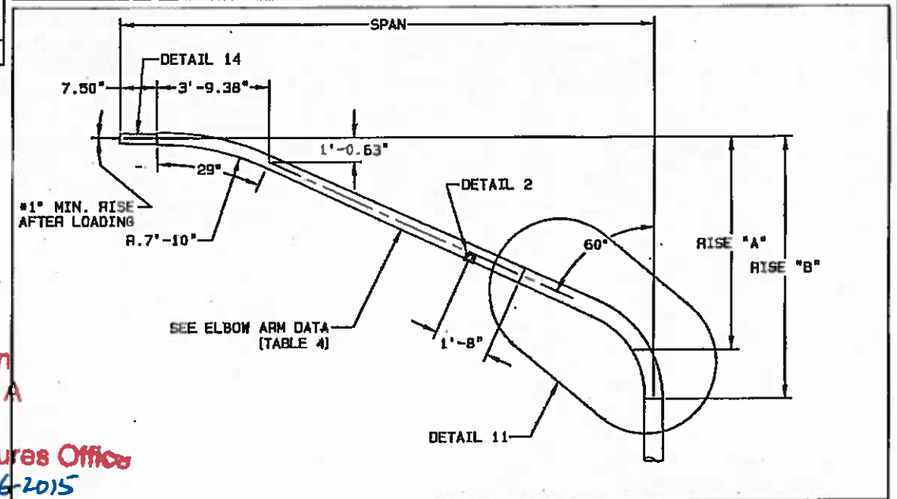

DETAIL 12 | ELBOW TYPE LUMINAIRE ARM

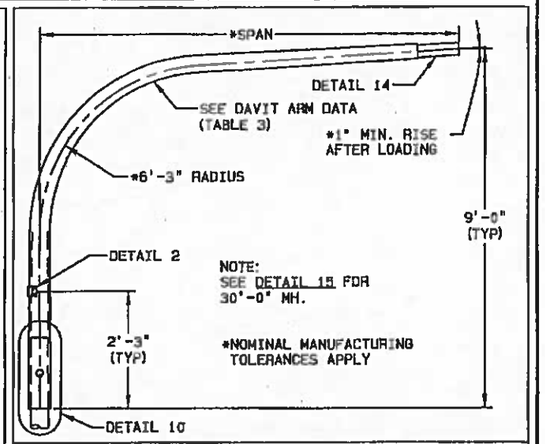

DETAIL 13 | DAVIT TYPE LUMINAIRE ARM

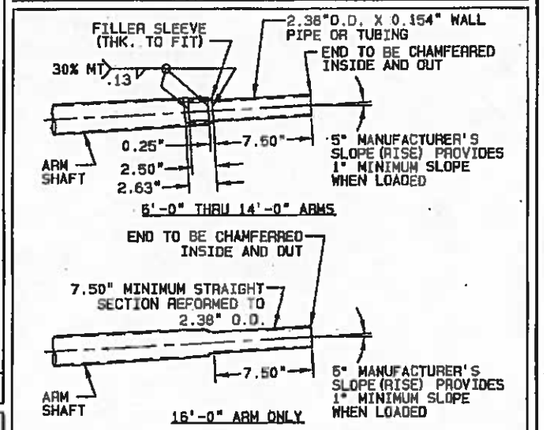

DETAIL 14 | SLIPFITTER

APPROVED
Manufacturer's Pole Plan
Approved For Listing As A
Pre-Approved Drawing
WSDOT Bridge & Structures Office
By GB Date 3-26-2015

STEPHEN R. OSTROM
STATE OF WASHINGTON
44852
REGISTERED
PROFESSIONAL ENGINEER
3/2/15

TITLE STATE OF WASHINGTON
TRAFFIC SIGNAL STRUCTURES

VALMONT INDUSTRIES, INC. RESERVES THE RIGHT TO INSTALL VARIOUS, ENGINEER APPROVED, MATERIAL HANGING ACCOMMODATIONS TO FACILITATE THE MANUFACTURING PROCESS.

valmont
Valley, NE 68064
(402) 359-2201

DRAWING NUMBER DB00625 REV U

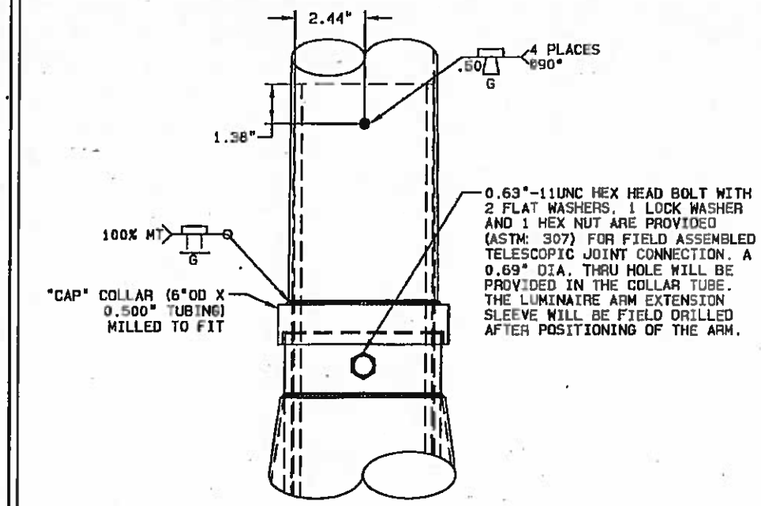

DETAIL A

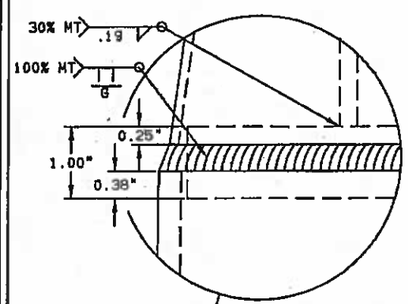

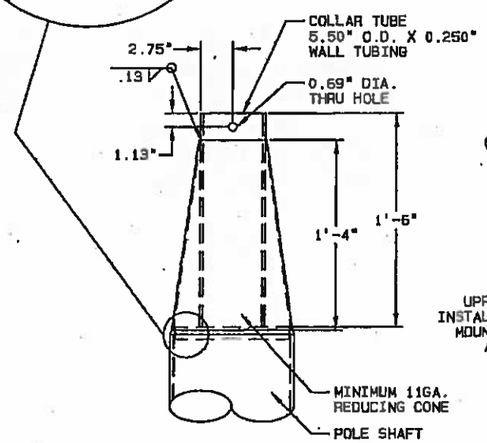

DETAIL B

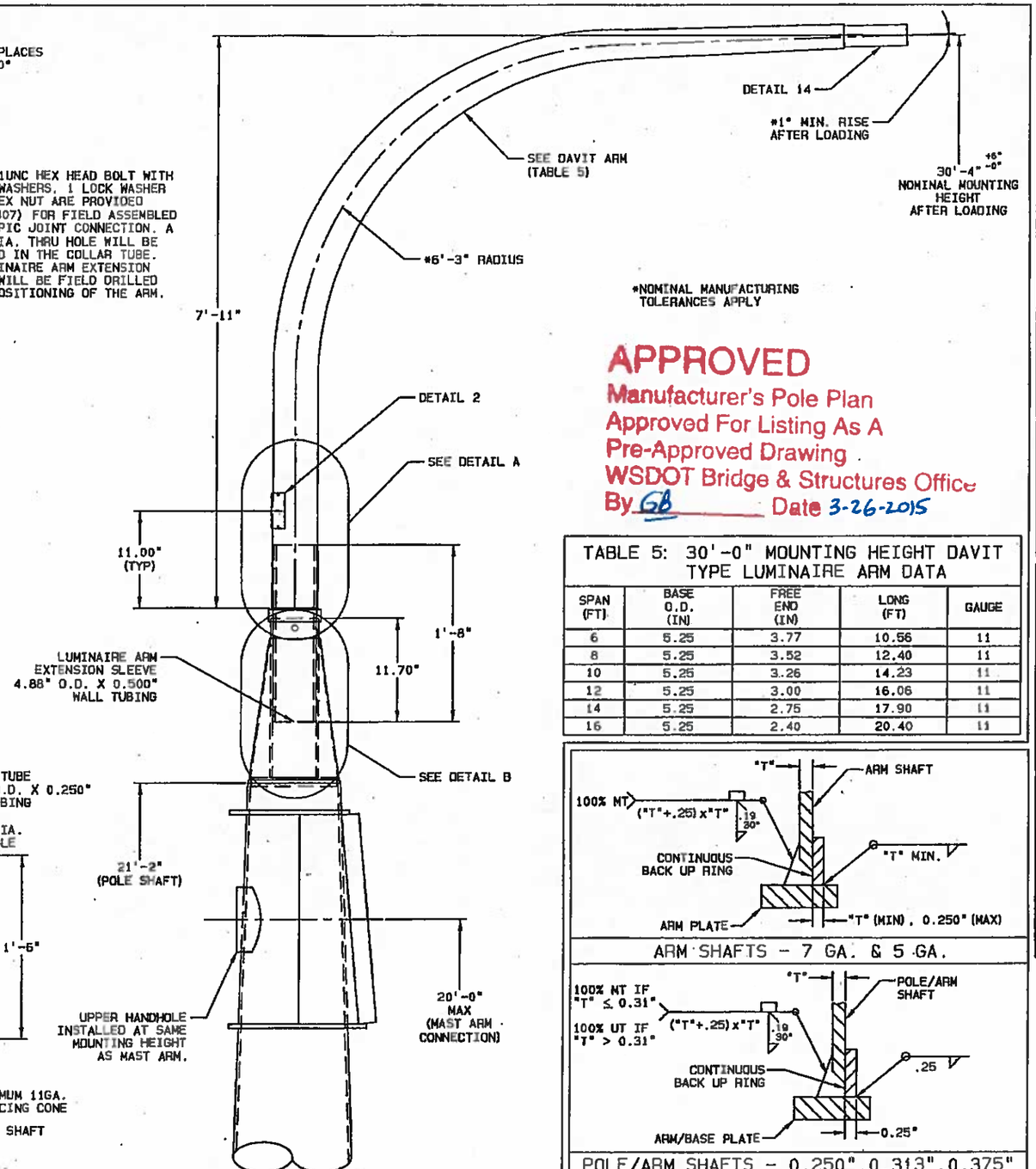

DETAIL 15 — 30'-0" MOUNTING HEIGHT DAVIT LUMINAIRE ARM

APPROVED
Manufacturer's Pole Plan
Approved For Listing As A
Pre-Approved Drawing
WSDOT Bridge & Structures Office
By GB Date 3-26-2015

TABLE 5: 30'-0" MOUNTING HEIGHT DAVIT TYPE LUMINAIRE ARM DATA

SPAN (FT)	BASE O.D. (IN)	FREE END (IN)	LONG (FT)	GAUGE
6	5.25	3.77	10.56	11
8	5.25	3.52	12.40	11
10	5.25	3.26	14.23	11
12	5.25	3.00	16.06	11
14	5.25	2.75	17.90	11
16	5.25	2.40	20.40	11

ARM SHAFTS - 7 GA. & 5 GA.

POLE/ARM SHAFTS - 0.250", 0.313", 0.375"

ARM PLATE & BASE PLATE WELD DETAIL

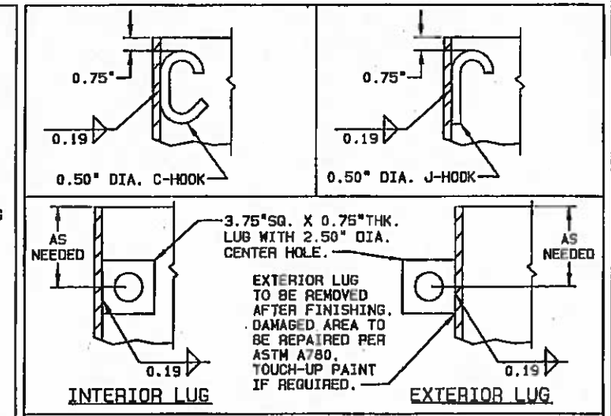

LUMINAIRE ARM - 0.75" DIA. HOLE, VISUALLY LOCATED AT END OF ARM

SIGNAL ARM - 1,000 LBS. OR LESS = (1) J-HOOK
1,001 LBS. THRU 2,000 LBS. = (2) J-HOOKS
OVER 2,000 LBS. = (1) LUG
END SECTION OF TWO PIECE ARM = (1) J-HOOK @ SMALL END OF ARM, (1) 0.75" DIA. HOLE @ LARGE END OF ARM

POLE - 1,000 LBS. OR LESS - (1) C-HOOK OR J-HOOK
1,001 LBS. THRU 2,000 LBS. - (2) C-HOOKS OR J-HOOKS
OVER 2,000 LBS. - (1) LUG

STANDARD MATERIAL HANGING ACCOMMODATIONS TO FACILITATE MANUFACTURING PROCESS

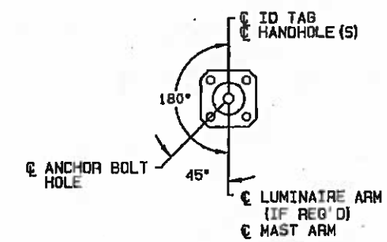

TYPICAL ORIENTATION

ALL ANGLES MEASURED CLOCKWISE FROM MAST ARM AS VIEWED FROM SMALL END OF POLE.

RADIAL INDEX

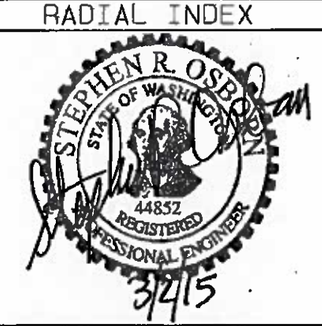

TITLE STATE OF WASHINGTON TRAFFIC SIGNAL STRUCTURES

VALMONT INDUSTRIES, INC. RESERVES THE RIGHT TO INSTALL VARIOUS, ENGINEER APPROVED, MATERIAL HANGING ACCOMMODATIONS TO FACILITATE THE MANUFACTURING PROCESS.

valmont
Valley, NE 68064
(402) 359-2201

PAGE NUMBER 4 OF 4
DRAWING NUMBER DB00625
REV U