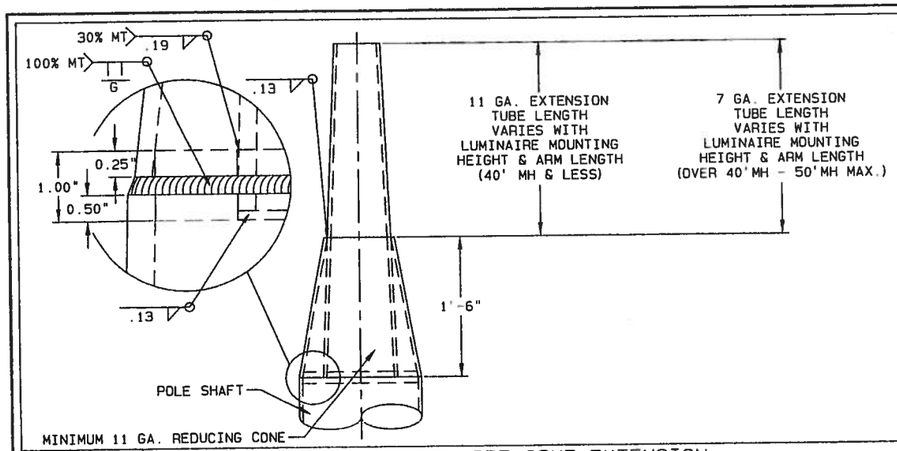

DETAIL 9 LUMINAIRE CONE EXTENSION

NOTE: MATING SURFACES SHALL BE SMOOTH AND FREE OF BURRS, DENTS & LUMPS OF ZINC.

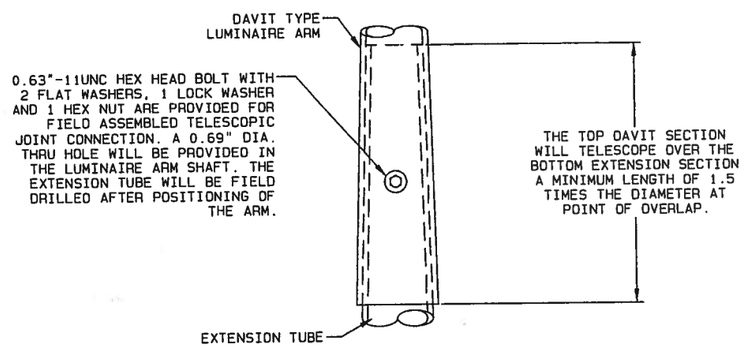

DETAIL 10 DAVIT TYPE TELESCOPIC JOINT

TABLE 3: DAVIT TYPE LUMINAIRE ARM DATA

SPAN (FT)	BASE O.D. (IN)	FREE END (IN)	LONG (FT)	GAUGE
6	5.41	3.77	11.66	11
8	5.41	3.52	13.50	11
10	5.41	3.26	15.33	11
12	5.41	3.00	17.16	11
14	5.41	2.75	19.00	11
16	5.41	2.40	21.50	11

TABLE 4: ELBOW TYPE LUMINAIRE ARM DATA

SPAN	RISE "A"	RISE "B"
6'-0"	1'-11.75"	2'-10"
8'-0"	3'-1.50"	4'-0"
10'-0"	4'-3.38"	5'-1"
12'-0"	5'-5.25"	6'-5"
14'-0"	6'-7.13"	7'-7"
*14'-0"	4'-1.13"	5'-1"
16'-0"	7'-9"	8'-9"
*16'-0"	5'-4"	6'-4"

*FOR 30'-0" MOUNTING HEIGHT

APPROVED
Manufacturer's Pole Plan
Approved For Listing As A
Pre-Approved Drawing
WSDOT Bridge & Structures Office
By GB Date 8-11-2011

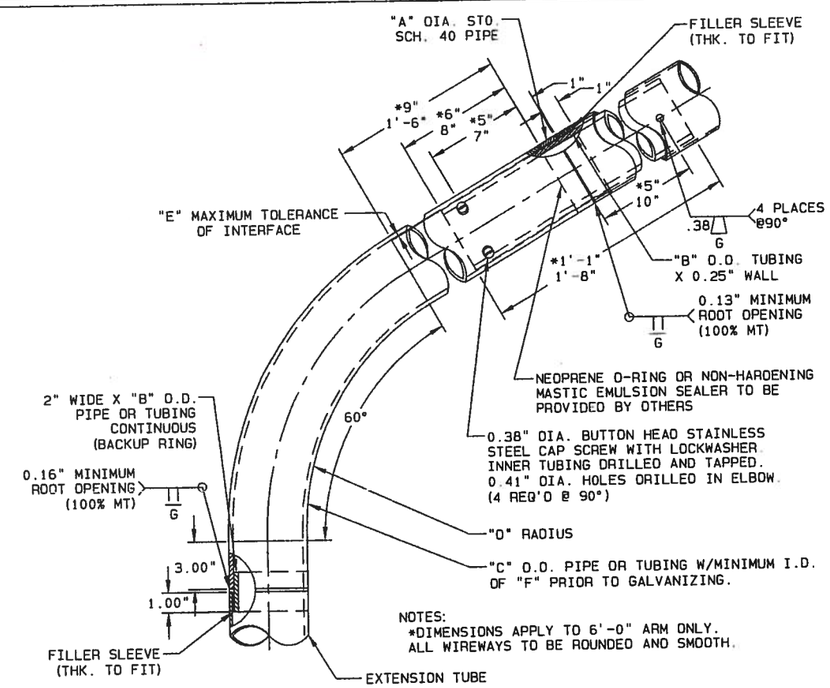

ARM SCHEDULE

ARM LENGTHS	"A"	"B"	"C"	"D"	"E"	"F"
6'-0" THRU 10'-0"	3.50"	3.50"	4.00"	1'-0"	0.031"	3.537"
12'-0" THRU 16'-0"	4.00"	4.00"	4.50"	1'-3"	0.015"	4.035"

DETAIL 11 ELBOW TYPE ARM ATTACHMENT

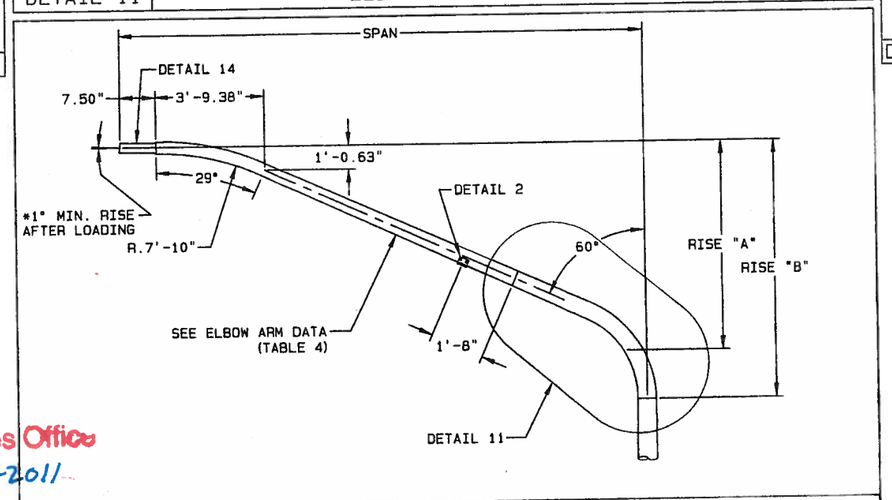

DETAIL 12 ELBOW TYPE LUMINAIRE ARM

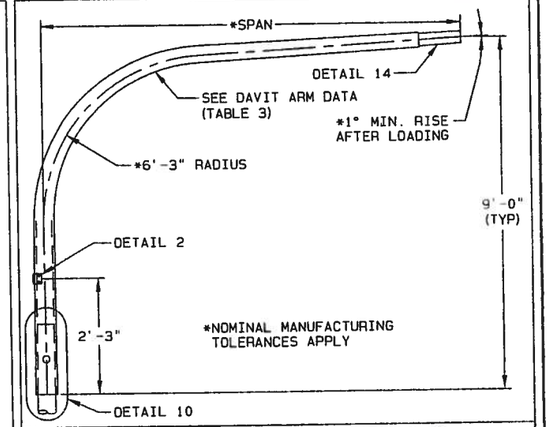

DETAIL 13 DAVIT TYPE LUMINAIRE ARM

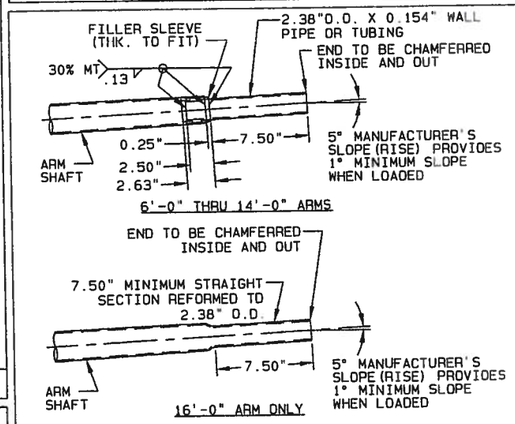

DETAIL 14 SLIPFITTER

TITLE STATE OF WASHINGTON
TRAFFIC SIGNAL STRUCTURES

VALMONT INDUSTRIES, INC. RESERVES THE RIGHT TO INSTALL VARIOUS, ENGINEER APPROVED, MATERIAL HANDLING ACCOMMODATIONS TO FACILITATE THE MANUFACTURING PROCESS.

valmont
Valley, NE 68064
(402) 359-2201

PAGE NUMBER: 3 OF 4
DRAWING NUMBER DB00625
REV R