Hardcopies of this document are considered uncontrolled and are to be used for reference only. Those using this document for reference must take all precautions available to ensure that this document matches the current revision maintained in digital format, within but a single source and protected by edit restrictions.

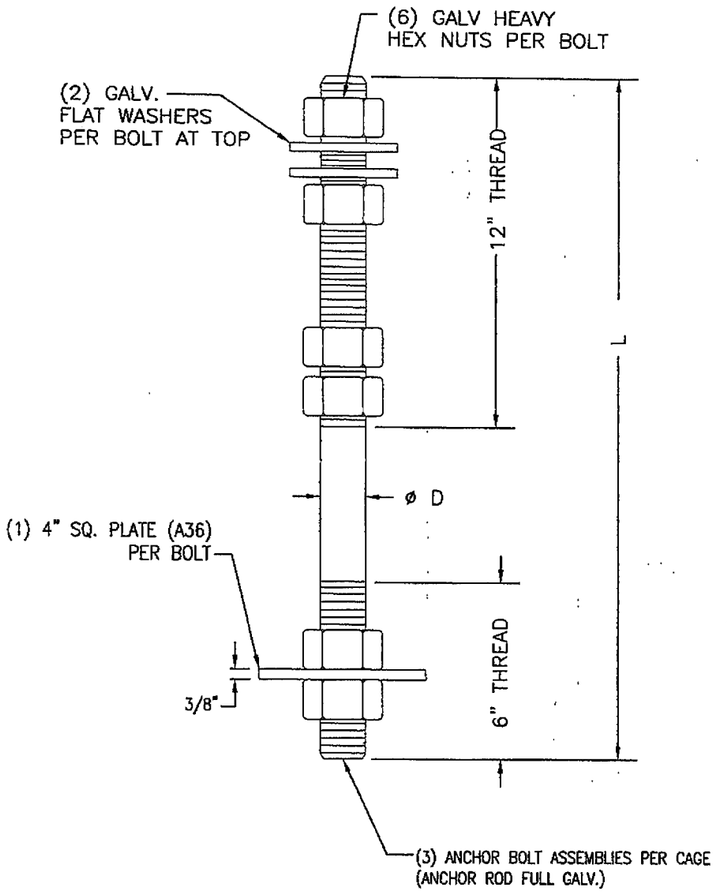

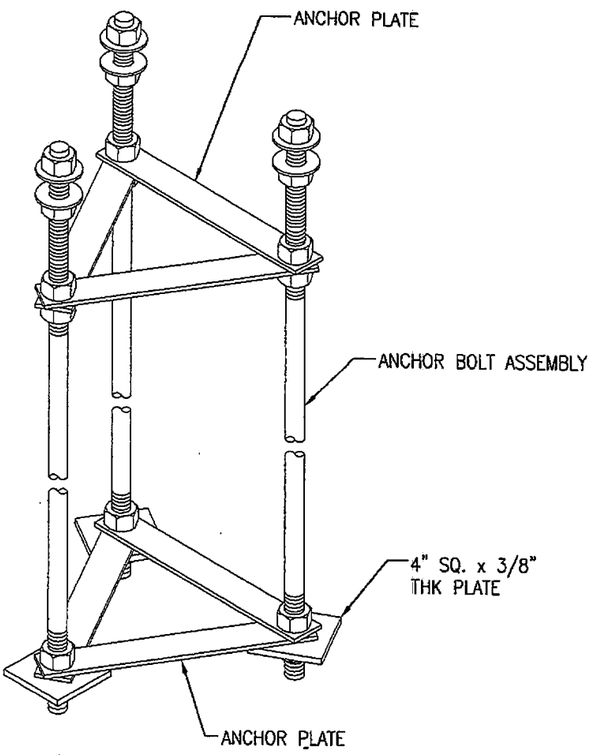

ANCHOR CAGE ASSEMBLY

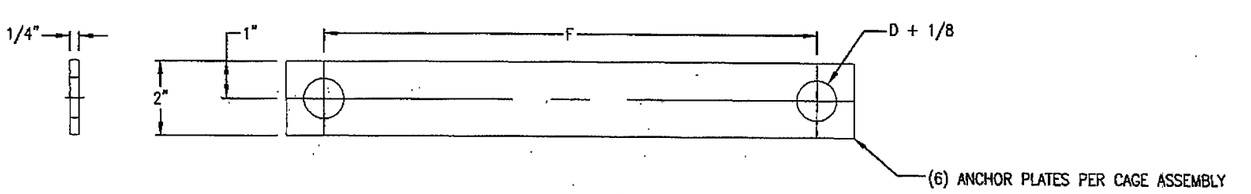

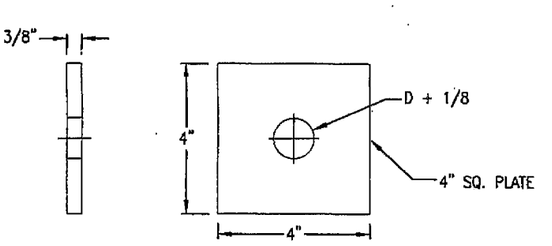

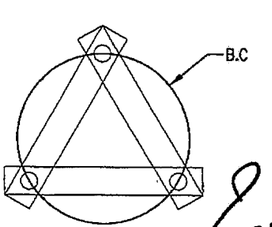

APPROVED
Manufacturer's Pole Plan
Approved For Listing As A
Pre-Approved Drawing
WSDOT Bridge & Structures Office
By GB Date 8/20/08

JOSEPH TONY DAVIS
STATE OF WASHINGTON
42929
REGISTERED
PROFESSIONAL ENGINEER
EXPIRES 2/1/2009

STRUCTURAL ENGINEER
CLARENCE L. MABIN
E-2970
4/22/08
STATE OF NEBRASKA

ANCHOR CAGE ASSEMBLY DATA				
CONTROL NO.	D	B.C	F	L
312393	1"	15"	13"	54"
312394	1 1/8"	15"	13"	54"

ADD SUFFIX TO CONTROL NO. (R) FOR ROLLED OR (C) FOR CUT THREADS

SEE STANDARD PRODUCT PROCEDURE NO. 18 FOR THREAD DETAIL

MATERIAL SPECIFICATIONS
A.BOLT: ASTM-F1554 GR 105
HEX NUTS: ASTM-A563 GR. DH
FLAT WASHER: ASTM-F436
PLATE/BAR: ASTM-A36 (BLACK)
GALVANIZING ASTM-A153

NOTE: SHIP ANCHOR CAGE ASS'Y UNASSEMBLED

REV	DESCRIPTION	DATE	REV BY	CHK BY
R1	A.BOLT MATERIAL WAS ASTM-A449 PER DWA-20273-3	4/11/08	LRR	SAD

REVISIONS

MATERIAL: LISTED	% SCRAP: 0.0	Control No. CHARTED
FINISH: PER QF-364	WEIGHT: 0.0	

ANCHOR CAGE ASSEMBLY

Union Metal Corporation

This document and the contents herein are proprietary and the property of Union Metal Corporation. This document is not to be, copied, reproduced, or used for any reason except for the purposes which it was issued without the express written consent of Union Metal Corporation. Furthermore Union Metal Corporation reserves the right to recall this document and all copies at any time for any reason.

DETAILED BY:	CHECKED BY:	DATE:	SCALE
SAD	JD	10/16/07	NTS
B100-B335			REVISION R1