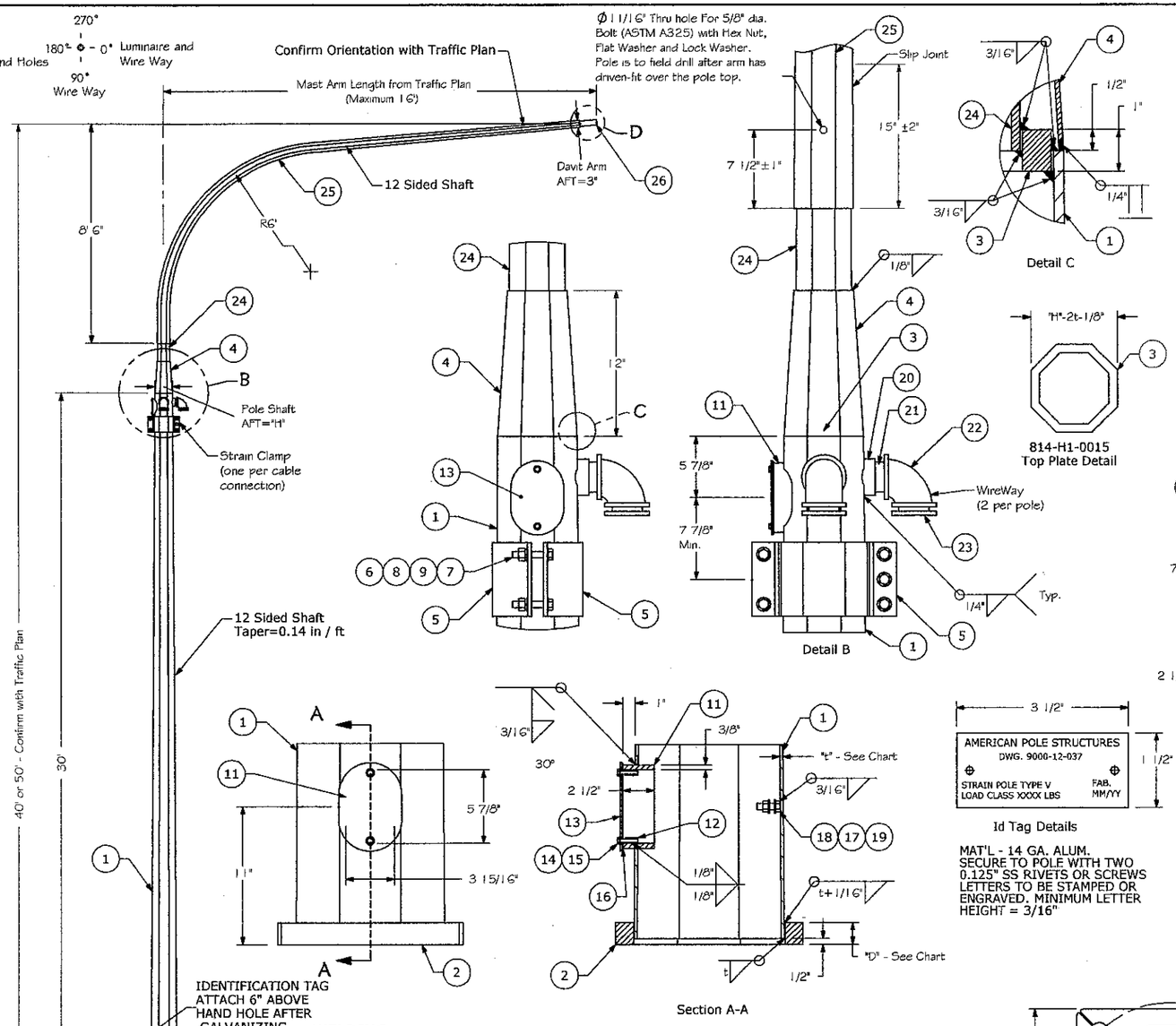

ITEM #	QTY.	PART NO.	DESCRIPTION	MATERIAL	LENGTH
1	1	800-12-0109	Pole Shaft -12 Sided	ASTM A572 GR.50, Thk="t" - See Chart	L=29'-11 1/2", AFB="C", AFT="H"
2	1	810-12-0047	Base Plate	ASTM A572 GR.42, Thk="D" - See Chart	
3	1	814-H1-0015	Top Plate	1" PL. ASTM A572 GR.50	
4	1	800-08-0116	Transition Cone	11GA ASTM A572 GR. 50	L=12", AFB="H"
5	2	890-C3-0011	Clamp	3/8" PL. A36	
6	10	754-AN-G015	Flat Washer	5/8" ASTM F436 Galvanized	Type A Narrow
7	5	750-HX-G083	Hex Head Bolt	5/8" NC - ASTM A325 Galvanized	3 1/2" Long
8	5	754-LR-G015	Lock Washer	5/8" ASTM F436 Galvanized	
9	5	752-HH-G006	Heavy Hex Nut	5/8" NC ASTM A563 Galvanized	
10	1	720-D1-0032	Pipe	1" Sch. 80 ASTM A53 GR.B	1"
11	2	820-A1-0021	Hand Hole Ring	3/8" x 2 1/2" HR FB A36	17 1/4"
12	4	752-CN-S001	Coupling Nuts	1/4" NC - 304 SS	
13	2	820-A2-0016	Cover Plate	10 GA ASTM A36	
14	4	754-AN-S009	Flat Washer	1/4" - 304 SS	Type A Narrow
15	4	750-HX-S029	Hex Head Bolt	1/4" NC - 304 SS	1 1/2" Long
16	2	890-B1-0006	Gasket		
17	2	754-AN-P013	Flat Washer	1/2" ASTM F436 Plated	Type A Narrow
18	1	750-HX-P036	Hex Head Bolt	1/2" NC - ASTM A325 Plated	1-1/2" Long
19	1	752-HN-P009	Hex Nut Regular	1/2" NC - ASTM A563 - Plated	
20	2	720-NP-0002	Split Coupling	2 1/2" - ASTM A53 GR.B	
21	2	720-NP-0003	Short Nipple	2 1/2" - ASTM A53 GR.B	
22	2	720-NP-0004	Elbow	2 1/2" - ASTM A53 GR.B	
23	2	720-NP-0005	Chase Nipple	2 1/2" - ASTM A53 GR.B	
24	1	800-12-0137	Stub Shaft	10 GA. ASTM A572 GR. 50	
25	1	800-12-D013	Davit Arm	10 GA. A572 GR. 50	AFT=3"
26	1	830-A1-0004	Tenon	2" Sch 40 Pipe ASTM A53 Gr. B	10 1/2"

3 1/2"

AMERICAN POLE STRUCTURES
DWG. 9000-12-037
STRAIN POLE TYPE V
LOAD CLASS XXXX LBS
FAB. MM/YY

1 1/2"

Id Tag Details

MAT'L - 14 GA. ALUM. SECURE TO POLE WITH TWO 0.125" SS RIVETS OR SCREWS LETTERS TO BE STAMPED OR ENGRAVED. MINIMUM LETTER HEIGHT = 3/16"

Pole Specifications as per WSDOT Standard Plan J-7c

WELDING:

WELDING SHALL BE IN ACCORDANCE WITH THE 2001 AASHTO SPECIFICATIONS FOR STRUCTURAL SUPPORTS OF HIGHWAY SIGNS, LUMINAIRES & TRAFFIC SIGNALS.

FINISH: (UNLESS OTHERWISE NOTED)
ALL COMPONENTS TO BE HOT DIP GALVANIZED AS PER ASTM A123 / A153

POLE CLASS	"t" Wall Thk.	"A" Base Plate Width	"B" Anchor Bolt Circle Dia.	"C" Pole Base Dia.	"D" Base Plate Thk.	"E1" Anchor Bolt Dia.	"E2" Anchor Bolt Length	"F" Anchor Plate Size	"H" Pole Top Dia.
1900 LB	N/A	N/A	N/A	N/A	N/A	N/A	N/A	N/A	N/A
2700 LB	5/16"	15"	16"	12"	1 3/4"	1 1/4"	60"	1"x4"x4"	7 13/16"
3700 LB	1/4"	17"	19"	14"	1 3/4"	1 3/8"	60"	1"x4"x4"	9 13/16"
4800 LB	5/16"	18"	20"	14"	2"	1 1/2"	60"	1"x5"x5"	9 13/16"
5600 LB	5/16"	18"	20"	15"	2"	1 1/2"	60"	1"x5"x5"	10 13/16"
6300 LB	5/16"	20"	22"	16"	2"	1 3/4"	66"	1"x6"x6"	11 13/16"
7200 LB	5/16"	20"	22"	17"	2"	1 3/4"	66"	1"x6"x6"	12 13/16"

REV	DESCRIPTION	DATE	BY	APPR'D
B	Added the Thru Bolt for Split Joint Connection	22-Apr-03	LB	SB
A	Initial Release	11-Apr-03	LB	SB

THIS DRAWING IS CONFIDENTIAL AND IS SUPPLIED ON THE UNDERSTANDING THAT IT IS NOT COPIED OR SHOWN WITHOUT THE WRITTEN CONSENT OF AMERICAN POLE

Engineering Stamp: PROFESSIONAL ENGINEER, PROVINCE OF BRITISH COLUMBIA, S.D. BRADWELL #20026, 24-APR-03

AMERICAN POLE STRUCTURES
Sedro Woolley, WA
Ph. (360) 855-0737 Fx (360) 855-1692

Type V Strain Pole

Class 1900 Lbs - 7200 Lbs

General Arrangement

Drawn By:	Date:	Dwg Scale:	Paper Sz:	Plot Date:
L. Barcan	11-Apr-03	1:55	B	23-Apr-03
Apprd By:	Date:	Project #:		Projection

Drawing #: 9020-12-007

Sht 1 of 1 Rev B