POLE CLASS	"t" Wall Thk.	"A" Base Plate Width	"B" Anchor Bolt Circle Dia.	"C" Pole Base Dia.	"D" Base Plate Thk.	"E1" Anchor Bolt Dia.	"E2" Anchor Bolt Length	"F" Anchor Plate Size	"H" Pole Top Dia.
1900 LB	5/16"	15"	16"	10"	1 3/4"	1 1/8"	48"	1"x3"x3"	5 13/16"
2700 LB	5/16"	15"	16"	12"	1 3/4"	1 1/4"	60"	1"x4"x4"	7 13/16"
3700 LB	1/4"	17"	19"	14"	1 3/4"	1 3/8"	60"	1"x4"x4"	9 13/16"
4800 LB	5/16"	18"	20"	14"	2"	1 1/2"	60"	1"x5"x5"	9 13/16"
5600 LB	5/16"	18"	20"	15"	2"	1 1/2"	60"	1"x5"x5"	10 13/16"
6300 LB	5/16"	20"	22"	16"	2"	1 3/4"	66"	1"x6"x6"	11 13/16"
7200 LB	5/16"	20"	22"	17"	2"	1 3/4"	66"	1"x6"x6"	12 13/16"

ITEM NO.	QTY.	PART NO.	DESCRIPTION	MATERIAL	LENGTH
1	1	800-12-0167	Pole Shaft - 12 Sided	ASTM A572 GR.50, Thk="t" - See Chart	L=29'-11 1/2", AFB="C", AFT="H"
2	1	810-12-0046	Base Plate	ASTM A572 GR.42, Thk="D" - See Chart	
3	2	890-C3-0019	Clamp	3/8" PL. A36	
4	10	754-AN-G015	Flat Washer	5/8" ASTM F436 Galvanized	Type A Narrow
5	5	750-HX-G083	Hex Head Bolt	5/8" NC - ASTM A325 Galvanized	3 1/2" Long
6	5	754-LR-G015	Lock Washer	5/8" ASTM F436 Galvanized	
7	5	752-HH-G006	Heavy Hex Nut	5/8" NC ASTM A563 Galvanized	
8	1	720-D1-0032	Pipe	1" Sch. 80 ASTM A53 GR.B	1"
9	2	820-A1-0021	Hand Hole Ring	3/8" x 2 1/2" HR FB A36	17 1/4"
10	4	752-CN-S001	Coupling Nuts	1/4" NC - 304 SS	
11	2	820-A2-0016	Cover Plate	10 GA ASTM A36	
12	4	754-AN-S009	Flat Washer	1/4" - 304 SS	Type A Narrow
13	4	750-HX-S029	Hex Head Bolt	1/4" NC - 304 SS	1 1/2" Long
14	2	890-B1-0006	Gasket		
15	2	754-AN-P013	Flat Washer	1/2" ASTM F436 Plated	Type A Narrow
16	1	750-HX-P036	Hex Head Bolt	1/2" NC - ASTM A325 Plated	1-1/2" Long
17	1	752-HN-P009	Hex Nut Regular	1/2" NC - ASTM A563 - Plated	
18	2	720-NP-0002	Split Coupling	2 1/2" - ASTM A53 GR.B	
19	2	720-NP-0003	Short Nipple	2 1/2" - ASTM A53 GR.B	
20	2	720-NP-0004	Elbow	2 1/2" - ASTM A53 GR.B	
21	2	720-NP-0005	Chase Nipple	2 1/2" - ASTM A53 GR.B	
22	1	860-A4-0023	End Cap	11GA ASTM A36	
23	2	754-AN-G013	Flat Washer	1/2" ASTM F436 Galvanized	Type A Narrow
24	2	752-HN-G009	Hex Nut Regular	1/2" NC - ASTM A563 - GALV.	
25	1	750-TR-G004	Threaded Rod	1/2" NC - ASTM A36 Galvanized	"H"+3/8"

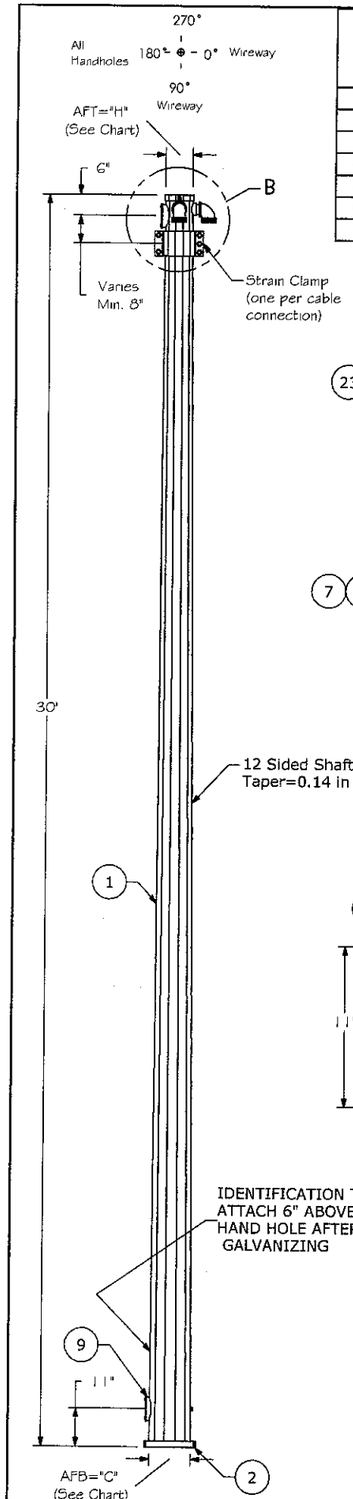

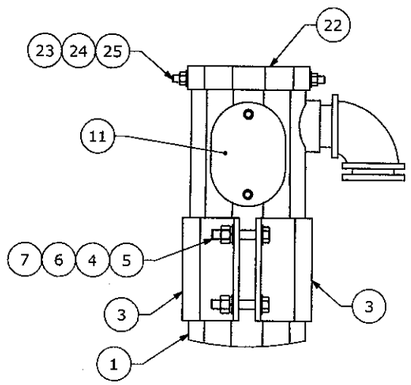

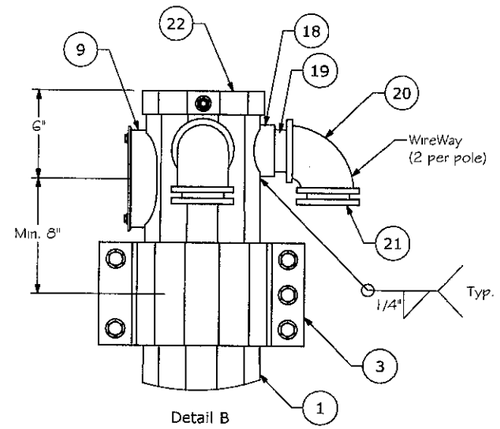

Detail B

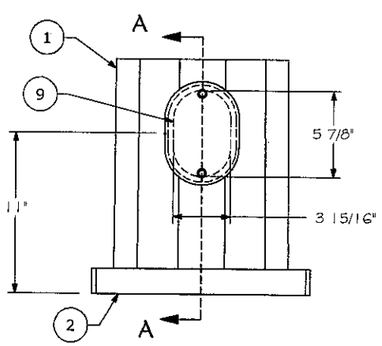

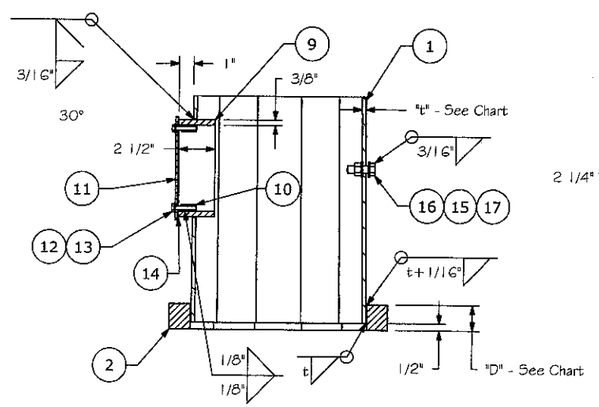

Section A-A

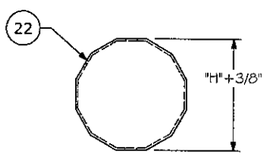

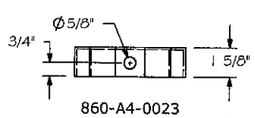

860-A4-0023
Removable End Cap Detail

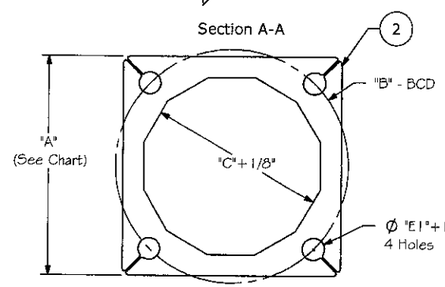

810-12-0046
Base Plate Detail

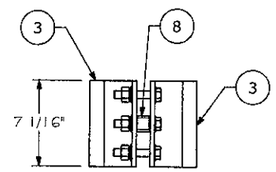

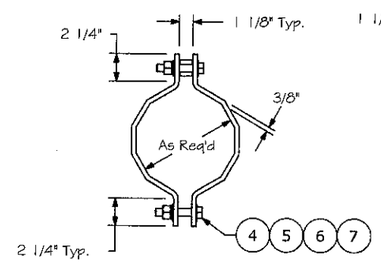

Clamp Assembly Detail

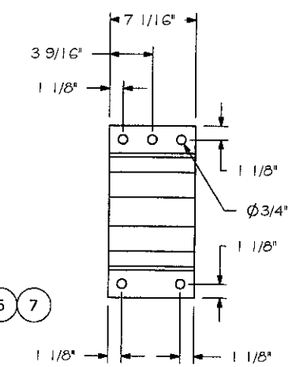

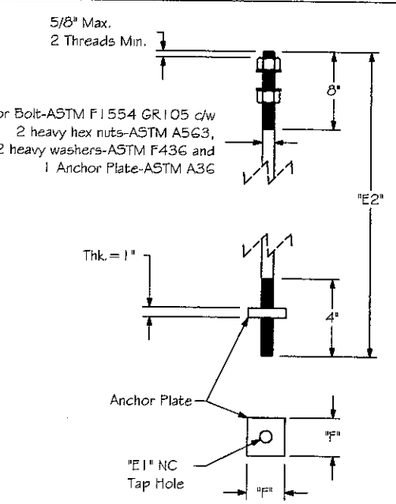

Anchor Bolt Detail

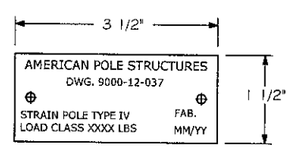

Id Tag Details

MAT'L - 14 GA. ALUM.
SECURE TO POLE WITH TWO 0.125" SS RIVETS OR SCREWS
LETTERS TO BE STAMPED OR ENGRAVED. MINIMUM LETTER HEIGHT = 3/16"

WELDING:
WELDING SHALL BE IN ACCORDANCE WITH THE 2001 AASHTO SPECIFICATIONS FOR STRUCTURAL SUPPORTS OF HIGHWAY SIGNS, LUMINAIRES & TRAFFIC SIGNALS.

FINISH: (UNLESS OTHERWISE NOTED)
ALL COMPONENTS TO BE HOT DIP GALVANIZED AS PER ASTM A123 / A153

Pole Specifications as per WSDOT Standard Plan J-7c

REV	DESCRIPTION	DATE	BY	APPR'D
A	Initial Release	11-Apr-03	LB	SB

THIS DRAWING IS CONFIDENTIAL AND IS SUPPLIED ON THE UNDERSTANDING THAT IT IS NOT COPIED OR SHOWN WITHOUT THE WRITTEN CONSENT OF AMERICAN POLE

Engineering Seal: PROFESSIONAL ENGINEER, PROVINCE OF BRITISH COLUMBIA, S.D. BRADWELL #20026, 13-APR-03

AMERICAN POLE STRUCTURES
Sedro Woolley, WA
Ph. (360) 855-0737 Fx (360) 855-1692

Type IV Strain Pole

Class 1900 Lbs - 7200 Lbs
General Arrangement
12 Sided

Drawn By:	Date:	Dwg Scale:	Paper Sz.:	Plot Date:
L. Barcan	11-Apr-03	1:42	B	13-Apr-03
Appr'd By:	Date:	Project #:		Projection

Drawing #: 9000-12-037 Sht 1 of 1 Rev A