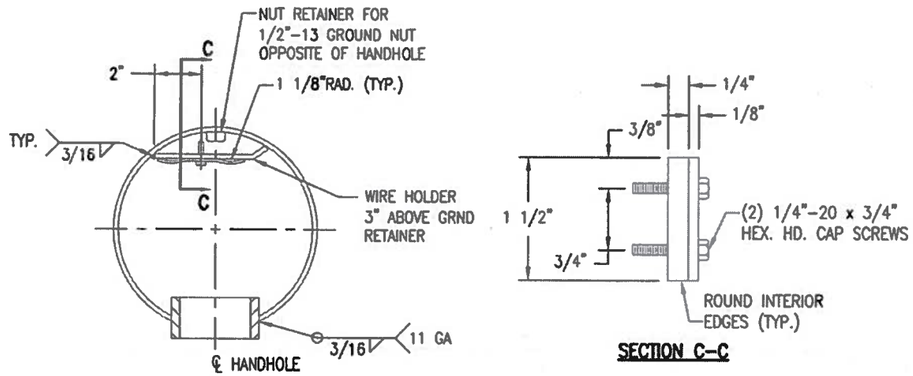


SECTION C-C

CONDUCTOR ATTACHMENT

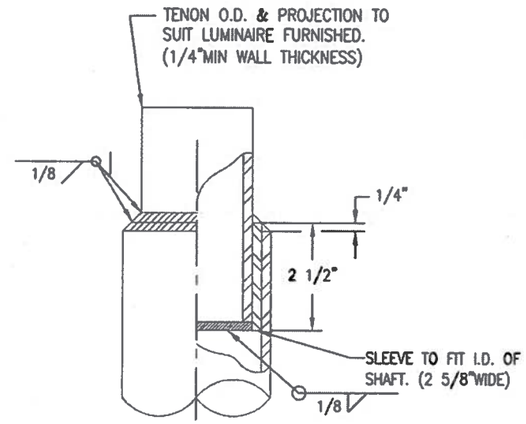


TENON TOP DETAIL
(DESIGN Y1 ONLY)

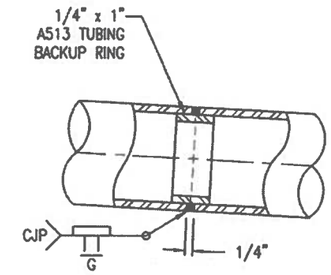


ARM SPLICE JOINT DETAIL
(10', 12', 14' & 16' LUM ARMS ONLY)

APPROVED
Manufacturer's Pole Plan
Approved For Listing As A
Pre-Approved Drawing
WSDOT Bridge & Structures Office
By GB Date 6-12-2014

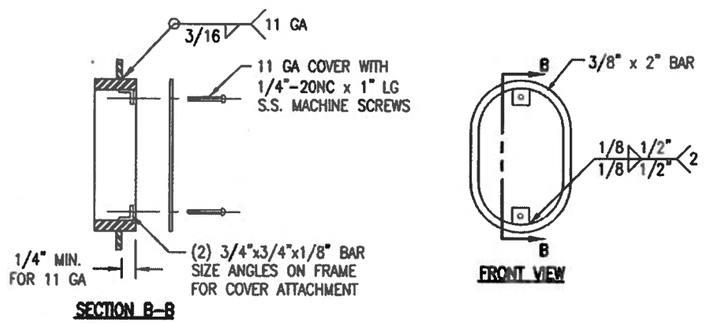


SECTION B-B

FRONT VIEW

4" x 6 1/2" HANDHOLE FRAME DETAIL

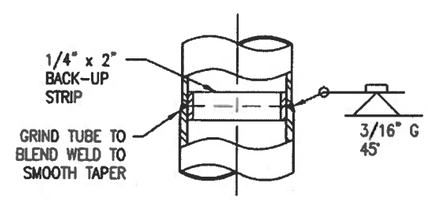


POLE SPLICE JOINT DETAIL
(DESIGN Y1 ONLY)

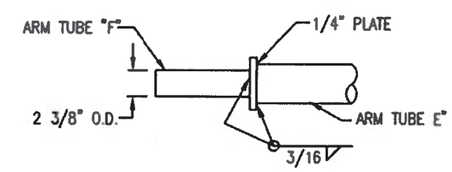


ARM SPLICE JOINT DETAIL
(6' & 8' LUM ARMS ONLY)

6/9/2014
Expires 11/17/2014

| PROJECT INFORMATION | |
|---|---|
| PROJECT: | |
| COUNTY: | |
| CITY: | |
| REQ: | |

STATE: WA | REQ# / SO# : ~

PROJECT NAME: WASHINGTON DOT

| REV | DESCRIPTION | DATE | REV BY | CHK BY |
|---|---|---|---|---|
| | REVISIONS | | | |

STEEL LIGHTING POLE W/ SINGLE & TWIN DAVIT ARMS (TYPE 1 ARM)
FOR WASHINGTON DOT

Union Metal Corporation

This document and the contents herein are proprietary and the property of Union Metal Corporation. This document is not to be, copied, reproduced, or used for any reason except for the purposes which it was issued without the express written consent of Union Metal Corporation. Furthermore Union Metal Corporation reserves the right to recall this document and all copies at any time for any reason.

| DESIGNED BY | CHECKED BY | DATE | SCALE | ENG REF |
|---|---|---|---|---|
| LRR | SAD | 8/18/09 | NTS | 71035-B38 |
| 71035-B50 | | | REVISION R4 | SHEET 3 OF 3 |

Hardcopies of this document are considered uncontrolled and are to be used for reference only. Those using this document for reference must take all precautions available to ensure that this document matches the current revision maintained in digital format, within but a single source and protected by edit restrictions.