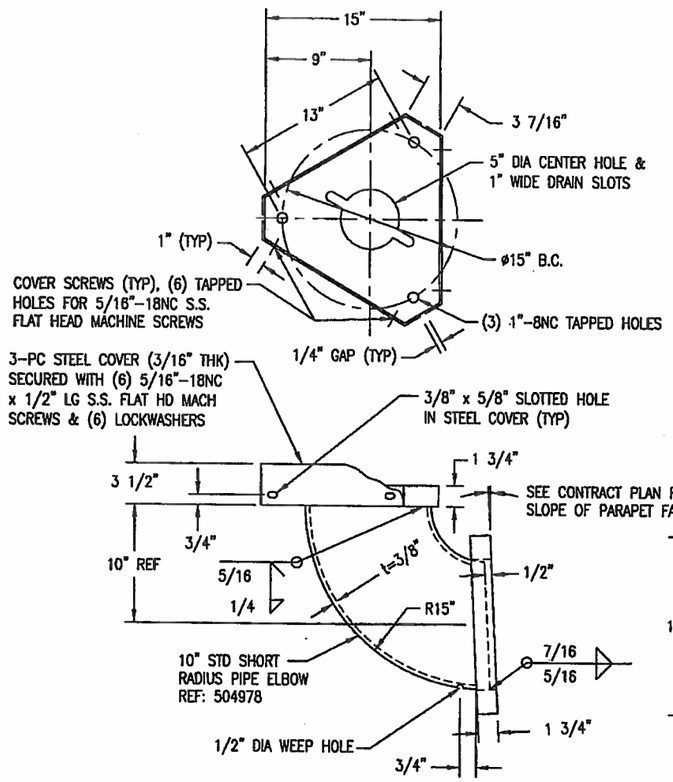

BRIDGE MOUNT ELBOW FOR 3-BOLT BASE
DESIGN NO. 71035-B47-Y1

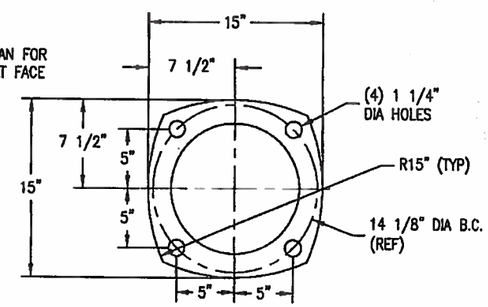

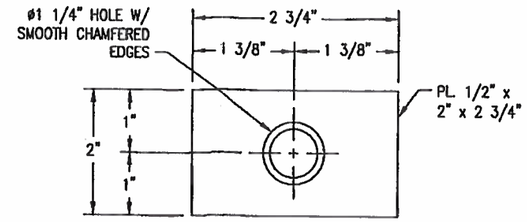

PLATE WASHER DETAIL

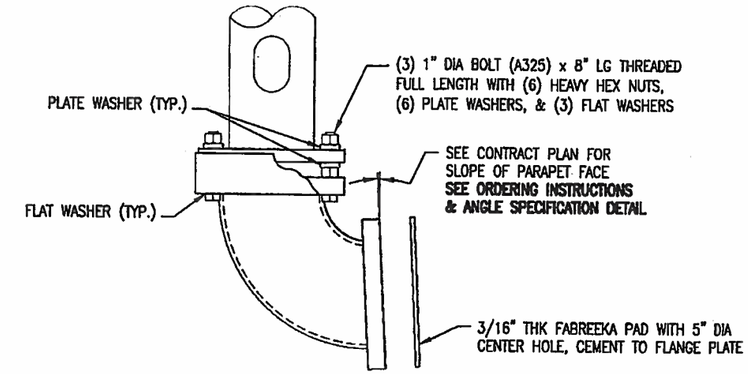

BRIDGE MOUNT ELBOW

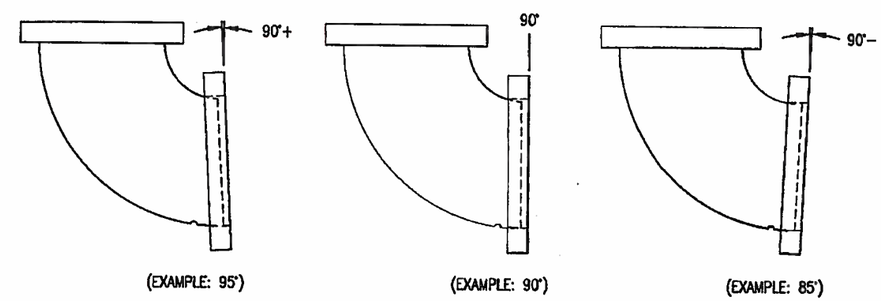

ANGLE SPECIFICATION DETAIL

APPROVED
Manufacturer's Pole Plan
Approved For Listing As A
Pre-Approved Drawing
WSDOT Bridge & Structures Office
By GB Date 8-23-2011

STATE OF OHIO
PAUL E. HAIG
E-041183
7/12/11
REGISTERED
PROFESSIONAL ENGINEER

DESIGN CRITERIA:

1. DESIGNED IN ACCORDANCE WITH WASHINGTON STATE DEPARTMENT OF TRANSPORTATION STANDARD PLAN J-28.45 AND CUSTOMER SPECIFICATIONS.

MATERIAL SPECIFICATIONS	
PLATES	ASTM A36
PIPE ELBOW	ASTM A234 WPB
S.S. HARDWARE	AISI-300 SERIES (18-8)
STRUCTURE FINISH	HD GALV TO ASTM A123
HARDWARE FINISH	HD GALV TO ASTM A153

ORDERING INSTRUCTIONS:
INCLUDE THE ANGLE (PER ANGLE SPECIFICATION DETAIL) AFTER THE DESIGN NO.
EXAMPLE FOR A 95° SLOPE: 71035-B47-Y1G-95

REV	DESCRIPTION	DATE	REV BY	CHK BY
R3	PER DWA-28148-1B: ADDED PLATE WASHERS. & UPDATED HDW. QTYS.	8/13/09	NMG	SAD
R2	PER DWA-050609-2: REMOVED "BY OTHERS" ON POLE CONNECTION BOLT NOTE, UPDATED STEEL COVER ATTACHMENT INFO (ADDED TAPPED HOLE & SLOTTED HOLE NOTES, ADDED LENGTH & TYPE OF SCREW, AND ADDED LOCKWASHERS), REMOVED DESIGN CRITERIA NOTE 2.	7/2/09	JW	JW
R1	PER DWA-050609-1: REMOVED DESIGN Y2 (4-BOLT BASE), ADDED ELBOW DIMENSIONS, REVISED FLANGE SLOPE NOTE, ADDED CONNECTION BOLT INFORMATION, REVISED FLANGE SHAPE (WAS SQUARE), UPDATED MATERIAL SPECIFICATIONS	5/27/09	JW	SAD

REVISIONS

STATE: WASHINGTON | REQ# / SO# : DWA-26804-1
PROJECT NAME: WSDOT

STEEL LIGHT STANDARD ELBOW MOUNTING DETAIL
WASHINGTON STATE DEPARTMENT OF TRANSPORTATION

Union Metal Corporation

This document and the contents herein are proprietary and the property of Union Metal Corporation. This document is not to be, copied, reproduced, or used for any reason except for the purposes which it was issued without the express written consent of Union Metal Corporation. Furthermore Union Metal Corporation reserves the right to recall this document and all copies at any time for any reason.

DESIGNED BY	CHECKED BY	DATE	SCALE	ENG REF
NMG	JWW	11/11/08	NTS	

71035-B47 | REVISION R3 | SHEET 1 OF 1

Hardcopies of this document are considered uncontrolled and are to be used for reference only. Those using this document for reference must take all precautions available to ensure that this document matches the current revision satisfactorily in digital format, within but a single source and protected by edit restrictions.