APPROVED
Manufacturer's Pole Plan
Approved For Listing As A
Pre-Approved Drawing
WSDOT Bridge & Structures Office
By GB Date 5-30-2012

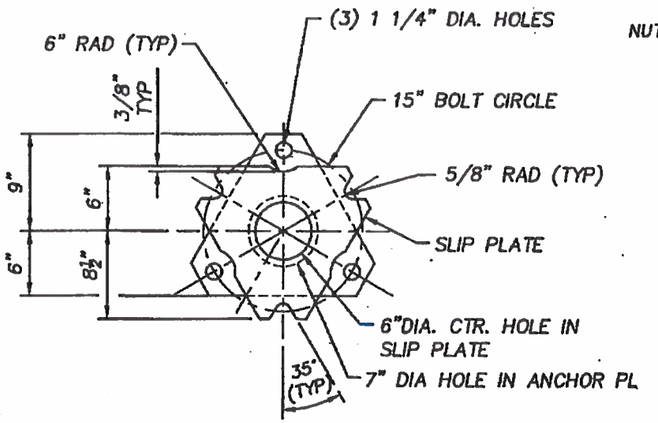

SLIP/ANCHOR BASE ASSEMBLY

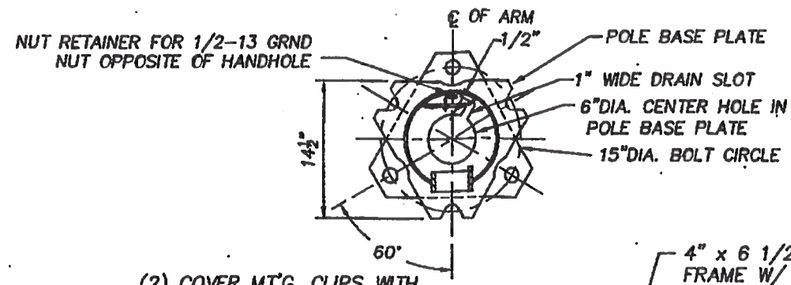

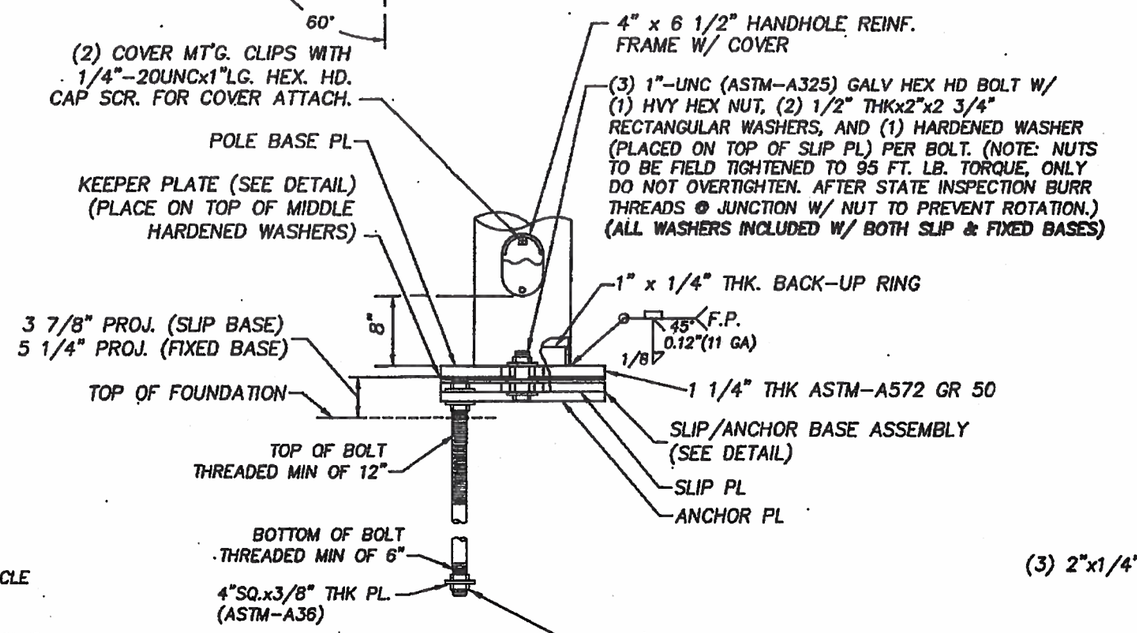

VIEW A-A

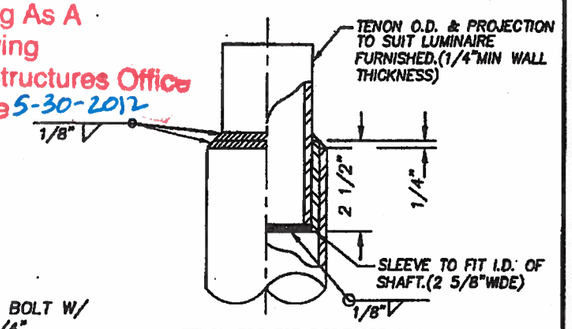

TENON TOP FOR DES.71035-Y41

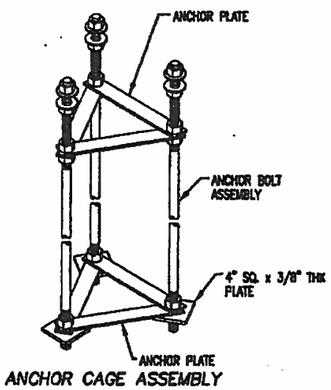

ANCHOR CAGE ASSEMBLY

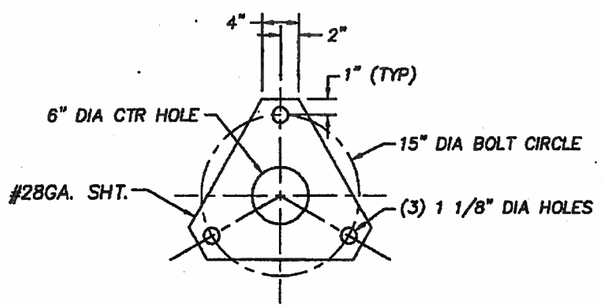

KEEPER PLATE DETAIL

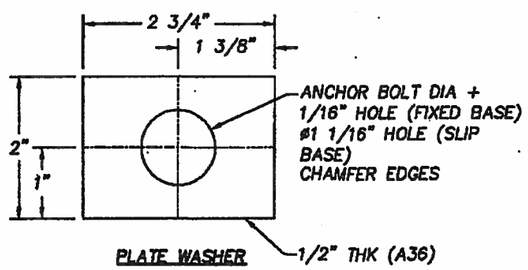

PLATE WASHER

(NOTE: FOR PLATE WASHER PLACEMENT SEE STANDARD PLAN J-28.40)

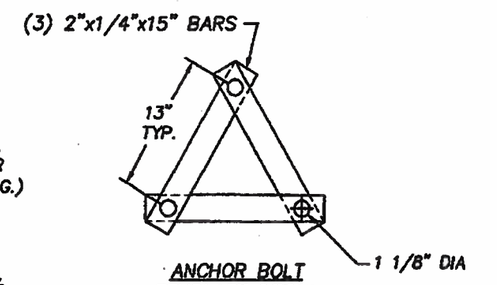

ANCHOR BOLT TEMPLATE DETAIL

(TWO SETS REQ'D PER POLE UNFINISHED)
(LOCATE 6" FROM TOP & ABOVE SQ. WASHERS@ BOTTOM)

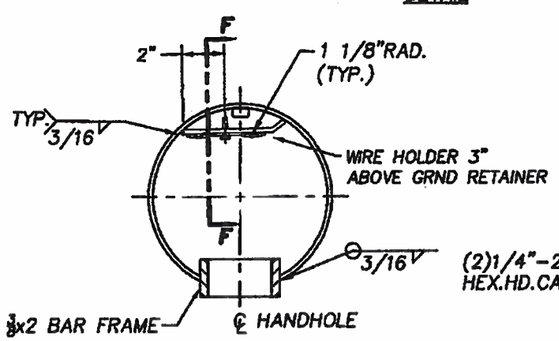

CONDUCTOR ATTACHMENT

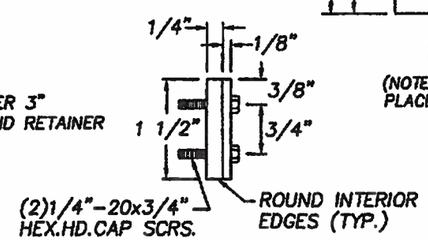

SECTION "F-F"

COMMONWEALTH OF MASSACHUSETTS
DAVID N. FRITZ
STRUCTURAL
No. 46458
REGISTERED PROFESSIONAL ENGINEER
5/21/12

STATE: WA	REQ# / SO# : ~	REV	DESCRIPTION	DATE	BY CK BY
PROJECT NAME: WASHINGTON DOT			REVISIONS		

40'-0" NOM. STEEL POLE W/ SINGLE & TWIN DAVIT ARMS (TYPE I ARM) FOR WASHINGTON DOT

Union Metal Corporation

This document and the contents herein are proprietary and the property of Union Metal Corporation. This document is not to be, copied, reproduced, or used for any reason except for the purposes which it was issued without the express written consent of Union Metal Corporation. Furthermore Union Metal Corporation reserves the right to recall this document and all copies at any time for any reason.

DESIGNED BY	CHECKED BY	DATE	SCALE	ENG REF
LCV	[illegible]	3/19/04	NTS	71035-B7
71035-B39			REVISION R10	SHEET 2 OF 2

Hardcopies of this document are considered uncontrolled and are to be used for reference only. These ruling file document for reference must take all precautions available to ensure that this document matches the current revision maintained in digital format, which has a single source and protected by data restriction.