APPROVED
Manufacturer's Pole Plan
Approved For Listing As A
Pre-Approved Drawing
WSDOT Bridge & Structures Office
By GB Date 5-12-2014

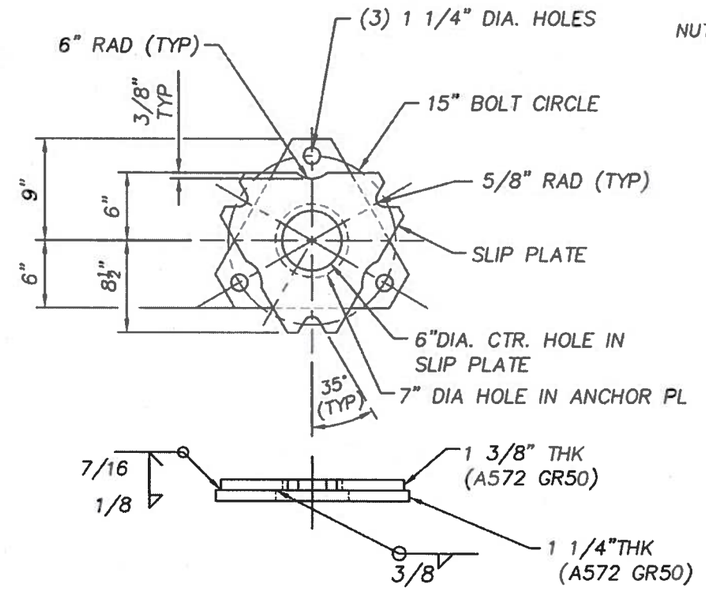

SLIP/ANCHOR BASE ASSEMBLY

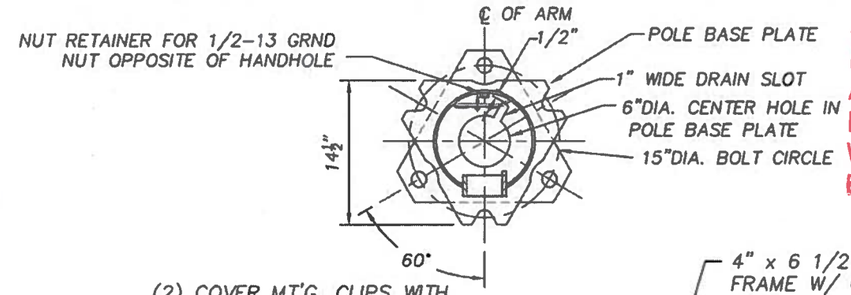

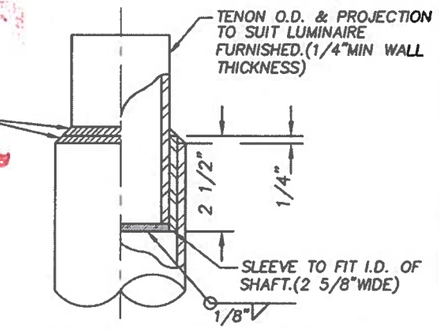

TENON TOP FOR DES.71035-B39-Y1

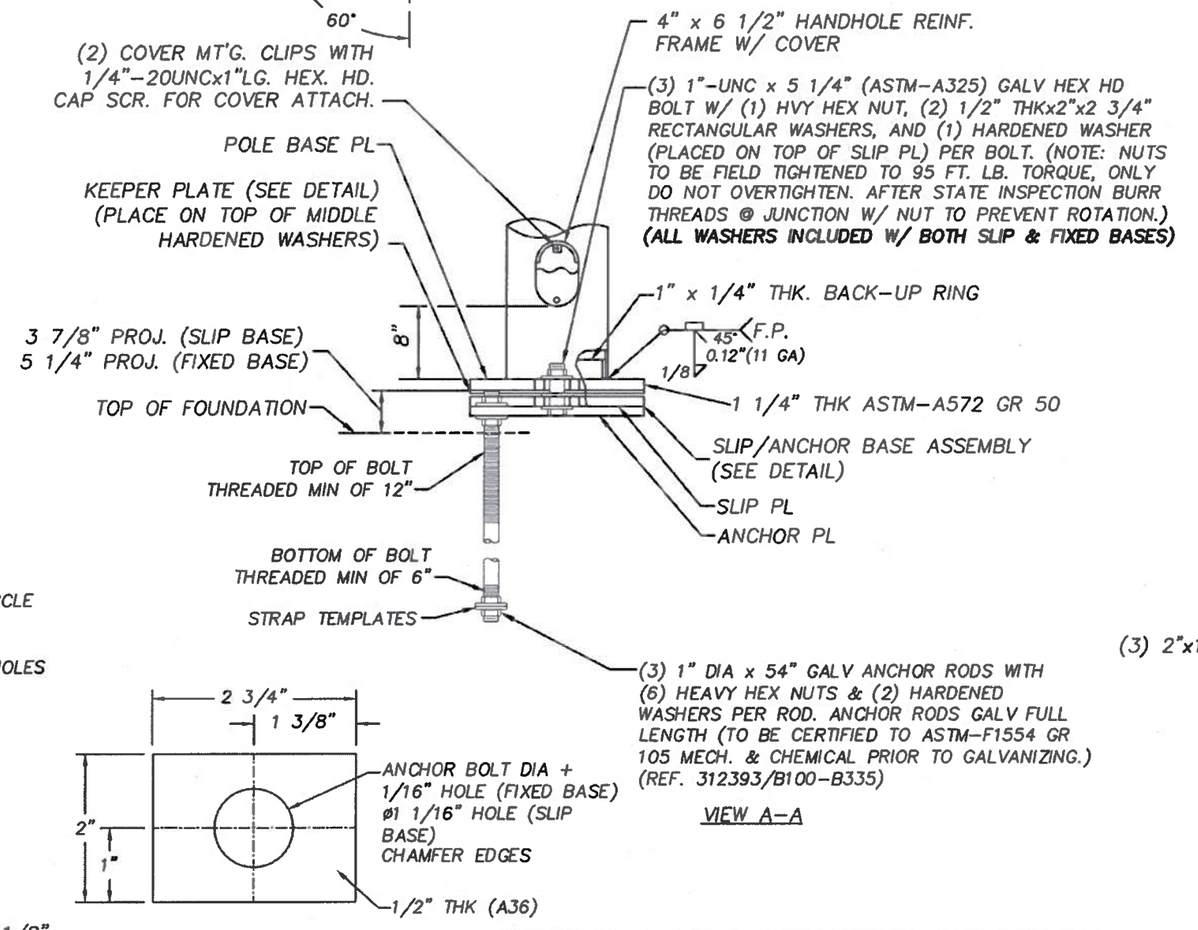

VIEW A-A

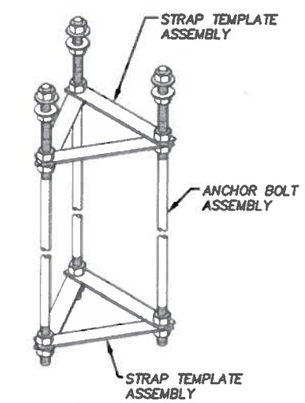

ANCHOR CAGE ASSEMBLY

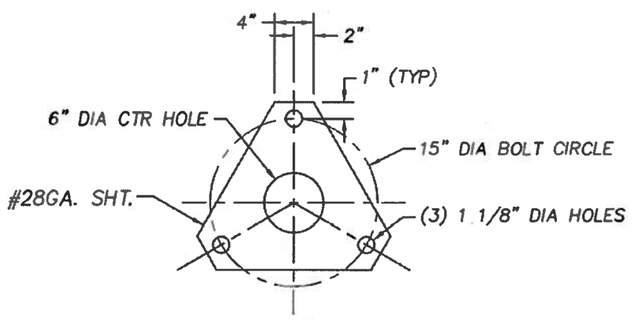

KEEPER PLATE DETAIL

PLATE WASHER

(NOTE: FOR PLATE WASHER PLACEMENT SEE STANDARD PLAN J-28.40)

ANCHOR BOLT STRAP TEMPLATE DETAIL

(2) SETS REQUIRED PER POLE (UNFINISHED)
LOCATE 6" FROM TOP OF FOUNDATION & 3" FROM BOTTOM OF BOLTS
TACK WELD AT (3) OVERLAPPING LOCATIONS

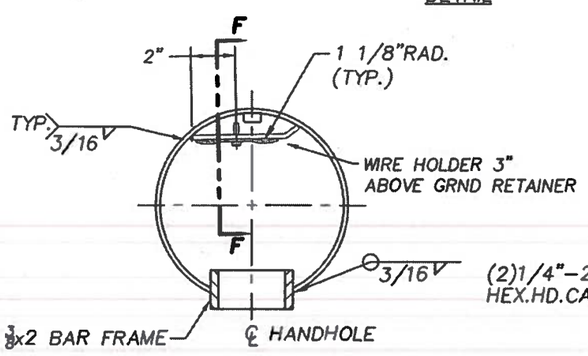

CONDUCTOR ATTACHMENT

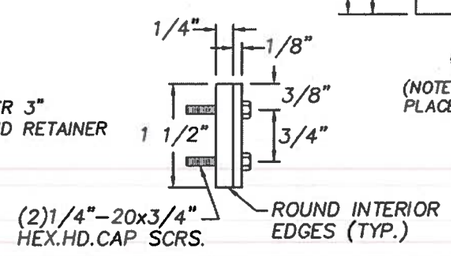

SECTION "F-F"

THOMAS S. LACH
STATE OF WASHINGTON
42082
REGISTERED PROFESSIONAL ENGINEER

5/9/2014
Expires 11/17/2014

PROJECT INFORMATION	
PROJECT:	
COUNTY:	
CITY:	
REQ:	

STATE: WA | REQ# / SO# : ~
PROJECT NAME: WASHINGTON DOT

REV	DESCRIPTION	DATE	REV BY	CHK BY
	REVISIONS			

STEEL LIGHTING POLE W/ SINGLE & TWIN DAVIT ARMS (TYPE I ARM)
FOR WASHINGTON DOT

Union Metal Corporation

This document and the contents herein are proprietary and the property of Union Metal Corporation. This document is not to be, copied, reproduced, or used for any reason except for the purposes which it was issued without the express written consent of Union Metal Corporation. Furthermore Union Metal Corporation reserves the right to recall this document and all copies at any time for any reason.

DESIGNED BY	CHECKED BY	DATE	SCALE	ENG REF
LCV	KKB	3/19/04	NTS	71035-B7
71035-B39			REVISION R11	SHEET 2 OF 2

Hardcopies of this document are considered uncontrolled and are to be used for reference only. Those using this document for reference must take all precautions available to ensure that this document matches the current revision maintained in digital format, within but a single source and protected by edit restrictions.