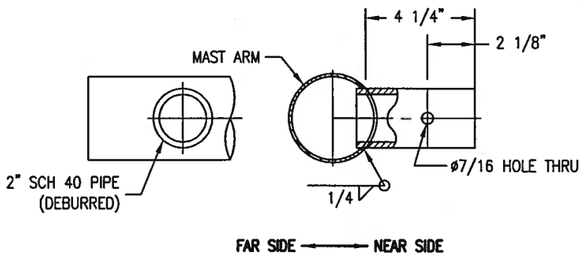

SIDE MOUNTED SIGNAL CONNECTION DETAIL

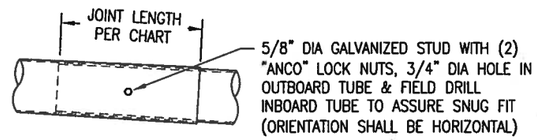

TELESCOPIC FIELD JOINT DETAIL
(FOR ARMS OVER 40'-0")

LUMINAIRE TENON DETAIL

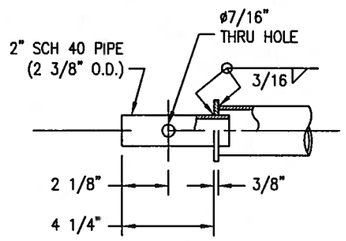

END MOUNTED SIGNAL CONN. DETAIL

LUMINAIRE ARM SLIP JOINT DETAIL

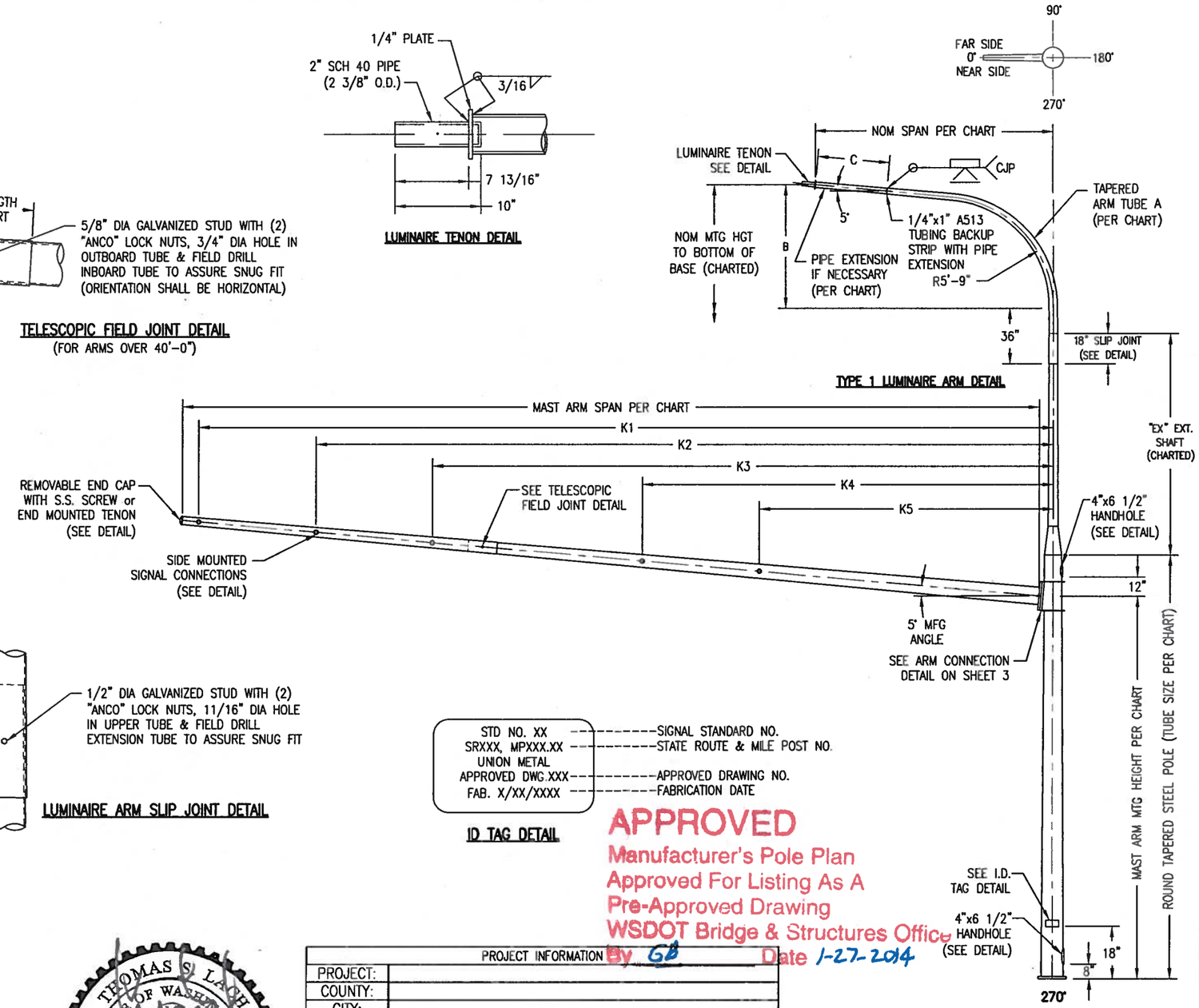

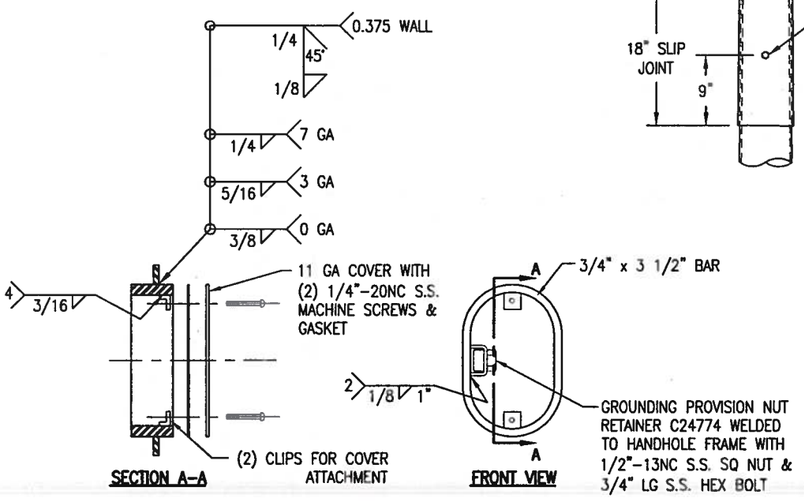

4" x 6 1/2" HANDHOLE FRAME DETAIL

STD NO. XX ----------SIGNAL STANDARD NO.
SRXXX, MPXXX.XX ----------STATE ROUTE & MILE POST NO.
UNION METAL
APPROVED DWG.XXX----------APPROVED DRAWING NO.
FAB. X/XX/XXXX ----------FABRICATION DATE

ID TAG DETAIL

APPROVED
Manufacturer's Pole Plan
Approved For Listing As A
Pre-Approved Drawing
WSDOT Bridge & Structures Office
By GB Date 1-27-2014

THOMAS S. LASH
STATE OF WASHINGTON
42082
REGISTERED
PROFESSIONAL ENGINEER
1/22/2014
Expires 11/17/2014

PROJECT INFORMATION	
PROJECT:	
COUNTY:	
CITY:	
REQ:	
STATE: WASHINGTON	REQ# / SO# : 0873-07-1
PROJECT NAME: WASHINGTON DOT STANDARDS	

REV	DESCRIPTION	DATE	REV BY	CHK BY
	REVISIONS			

TYPE III STEEL COMBINATION TRAFFIC & STREET LIGHTING POLES, TYPE 1 LUM. ARM
STATE OF WASHINGTON DOT

Union Metal Corporation

This document and the contents herein are proprietary and the property of Union Metal Corporation. This document is not to be, copied, reproduced, or used for any reason except for the purposes which it was issued without the express written consent of Union Metal Corporation. Furthermore Union Metal Corporation reserves the right to recall this document and all copies at any time for any reason.

DESIGNED BY	CHECKED BY	DATE	SCALE	ENG REF
LCV	CRL	3/4/03	NTS	71026-B35
71026-B87			REVISION R13	SHEET 2 OF 3

Hardcopies of this document are considered uncontrolled and are to be used for reference only. These using this document for reference must take all precautions available to ensure that this document matches the current revision maintained in digital format, within but a single source and protected by edit restrictions.