Hardcopies of this document are considered uncontrolled and are to be used for reference only. Those using this document for reference must take all procedures available to ensure that this document satisfies the current revision maintained in digital format, within but a single source and protected by rule restrictions.

APPROVED
Manufacturer's Pole Plan
Approved For Listing As A
Pre-Approved Drawing
WSDOT Bridge & Structures Office
By GB Date 5-30-2012

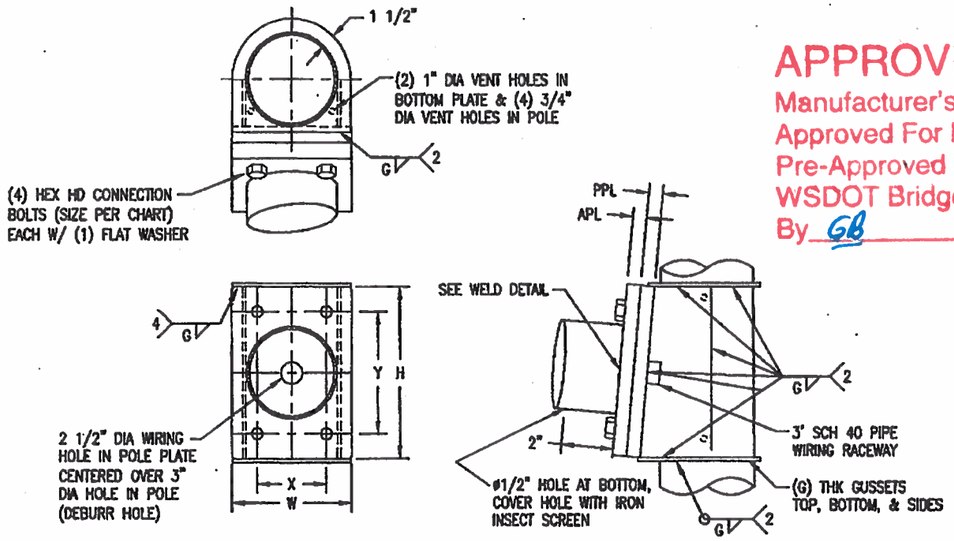

MAST ARM CONNECTION DETAIL

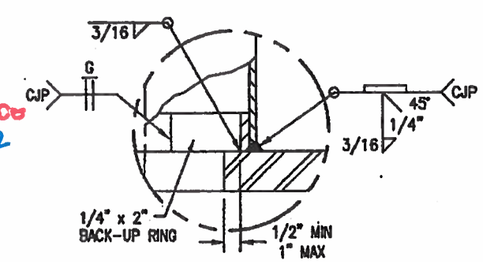

POLE BASE (PER CHART) & ARM FLANGE FULL PEN WELD DETAIL

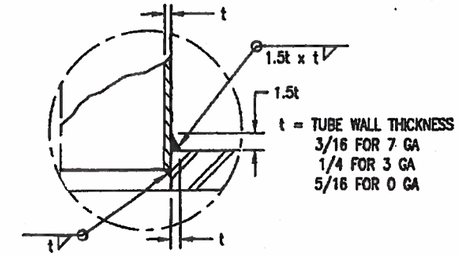

POLE BASE SOCKET WELD DETAIL (PER CHART)

TIGHTENING USING TURN OF NUT METHOD BY: SPECIFICATION FOR STRUCTURAL JOINTS USING A325 OR A490 BOLTS, RESEARCH COUNCIL ON STRUCTURAL CONNECTIONS 6/00

1) BOLTS SHALL BE PLACED IN ALL HOLES WITH WASHERS. COMPACTING THE JOINT TO THE SNUG TIGHT CONDITION SHALL PROGRESS SYSTEMATICALLY. THE SNUG-TIGHTENED CONDITION IS THE TIGHTNESS THAT IS ATTAINED WITH A FEW IMPACTS OF AN IMPACT WRENCH OR THE FULL EFFORT OF AN IRONWORKER USING AN ORDINARY SPUD WRENCH TO BRING THE CONNECTED PLIES INTO FIRM CONTACT.

2) FOR BOLT LENGTHS NOT MORE THAN 4 BOLT DIAMETERS, WITH BOTH FACES NORMAL TO BOLT, 1/3 TURN PAST SNUG POINT. FOR ONE FACE SLOPED NO MORE THAN 1:20, 1/2 TURN PAST SNUG. FOR BOTH FACES SLOPED NO MORE THAN 1:20 FROM BOLT, 2/3 TURN PAST SNUG.

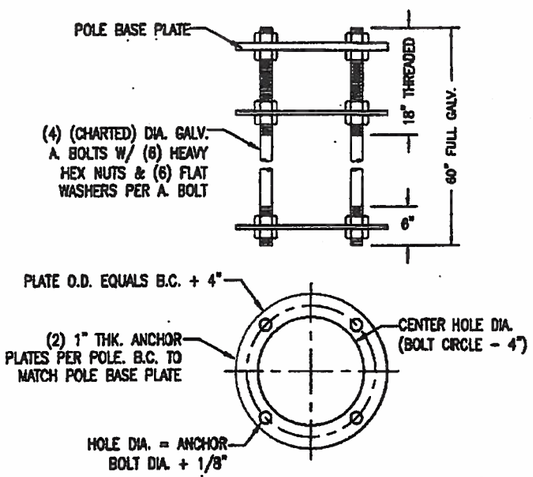

ANCHOR BOLT CONFIGURATION
(SHIPPED UNASSEMBLED)
(REF. B100-A354)

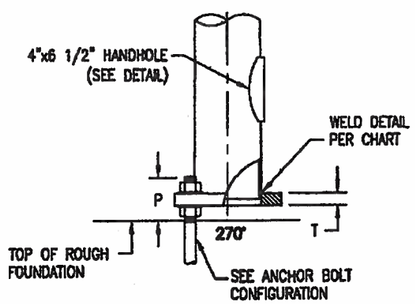

BASE CONNECTION DETAIL

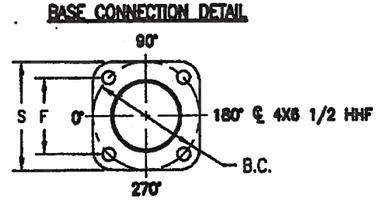

BASE PLATE DETAIL

COMMONWEALTH OF MASSACHUSETTS
DAVID N. FRITZ
STRUCTURAL
No. 48458
REGISTERED PROFESSIONAL ENGINEER
5/21/12

STATE: WASHINGTON	REQ# / SO# : 0873-07-1	REV	DESCRIPTION	DATE	BY	CHK BY
PROJECT NAME: WASHINGTON DOT STANDARDS			REVISIONS			

TYPE II STEEL TRAFFIC POLES
STATE OF WASHINGTON DOT

Union Metal Corporation

This document and the contents herein are proprietary and the property of Union Metal Corporation. This document is not to be, copied, reproduced, or used for any reason except for the purposes which it was issued without the express written consent of Union Metal Corporation. Furthermore Union Metal Corporation reserves the right to recall this document and all copies at any time for any reason.

DESIGNED BY	CHECKED BY	DATE	SCALE	ENG REF
LCV	[illegible]	2/12/03	NTS	71026-B34
71026-B86			REVISION R10	SHEET 3 OF 3