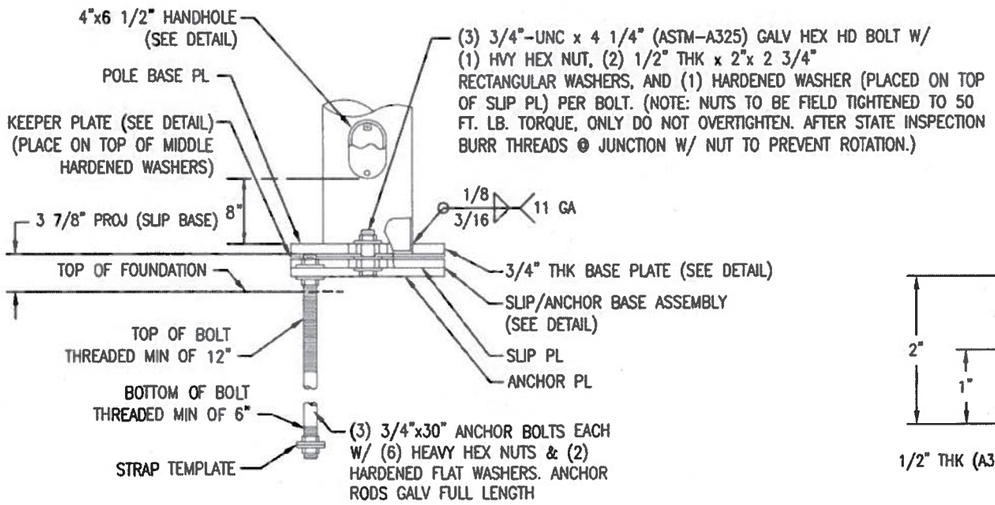


## SLIP BASE CONNECTION DETAIL

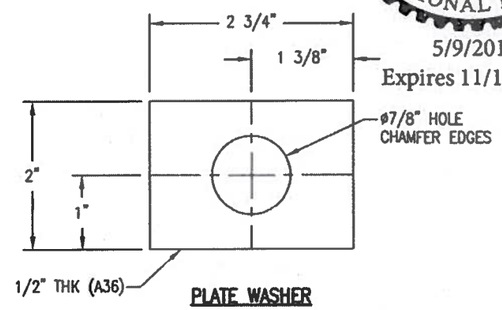


**PLATE WASHER**

NOTE: FOR PLATE WASHER PLACEMENT SEE STANDARD PLAN J-21.10-01

THOMAS S. LACH
STATE OF WASHINGTON
42082
REGISTERED
PROFESSIONAL ENGINEER

5/9/2014
Expires 11/17/2014

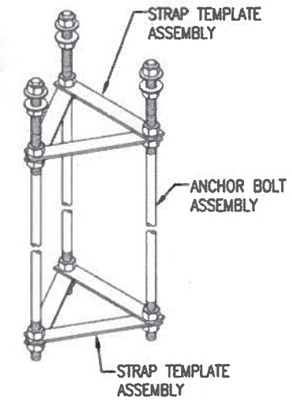


**ANCHOR CAGE ASSEMBLY**

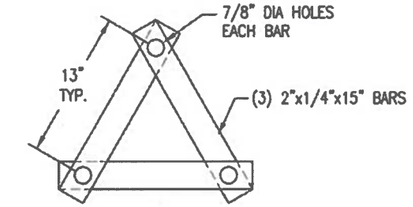


**ANCHOR BOLT TEMPLATE DETAIL**

(TWO SETS REQ'D PER POLE, UNFINISHED)
LOCATE 7 7/8" FROM TOP OF BOLTS & 4 1/8" FROM BOTTOM OF BOLTS
TACK WELD AT (3) OVERLAPPING LOCATIONS

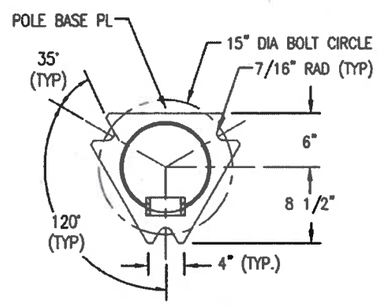


**BASE PLATE DETAIL**

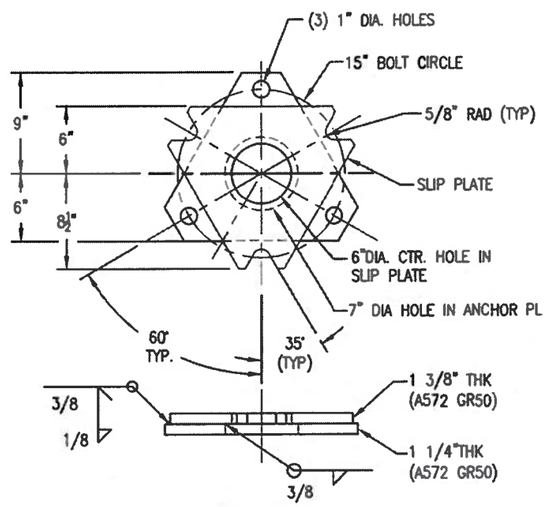


**SLIP/ANCHOR BASE ASSEMBLY**

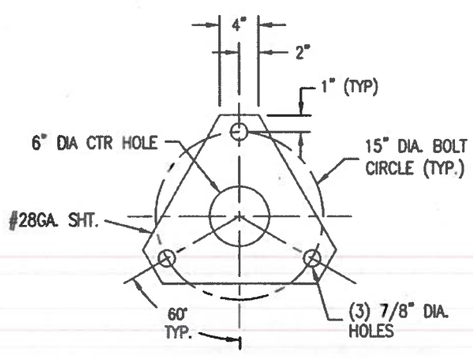


**KEEPER PLATE DETAIL**

APPROVED
Manufacturer's Pole Plan
Approved For Listing As A
Pre-Approved Drawing
WSDOT Bridge & Structures Office
By GB Date 5-12-2014

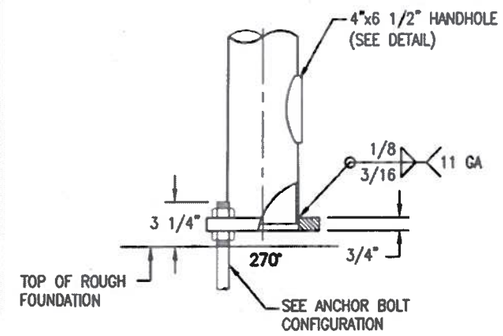


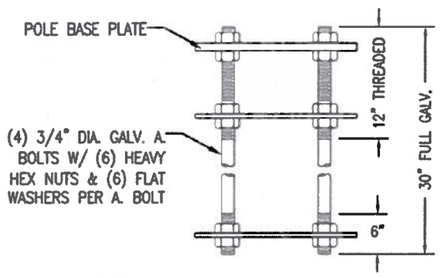


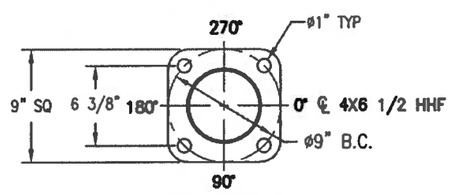


**BASE PLATE DETAIL**

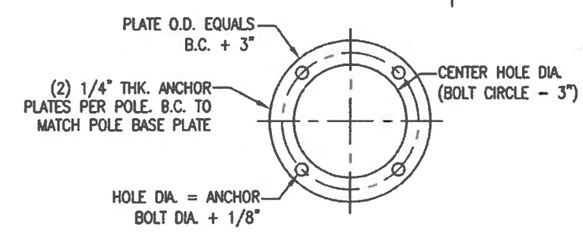


**ANCHOR BOLT CONFIGURATION**
(SHIPPED UNASSEMBLED)

## FIXED BASE CONNECTION DETAIL

| PROJECT INFORMATION | |
|---|---|
| PROJECT: | |
| COUNTY: | |
| CITY: | |
| REQ: | |

| STATE: WA | REQ# / SO# : 0634-16-97 | REV | DESCRIPTION | DATE | REV BY | CHK BY |
|---|---|---|---|---|---|---|
| PROJECT NAME: | | | REVISIONS | | | |

STANDARD TRAFFIC SIGNAL W/ POST TOP, TYPE FB & RM
STATE OF WASHINGTON DOT

Union Metal Corporation

This document and the contents herein are proprietary and the property of Union Metal Corporation. This document is not to be, copied, reproduced, or used for any reason except for the purposes which it was issued without the express written consent of Union Metal Corporation. Furthermore Union Metal Corporation reserves the right to recall this document and all copies at any time for any reason.

| DESIGNED BY | CHECKED BY | DATE | SCALE | ENG REF |
|---|---|---|---|---|
| JDJ | SMP | 12/30/97 | NTS | 0634A97 |
| 50200-B58 | | | REVISION R7 | SHEET 2 OF 2 |

Hardcopies of this document are considered uncontrolled and are to be used for reference only. Those using this document for reference must take all precautions available to ensure that this document matches the current revision maintained in digital format, within but a single source and protected by edit restrictions.