THOMAS S. DACH
STATE OF WASHINGTON
42082
REGISTERED
PROFESSIONAL ENGINEER
5-25-11
Expires 11-17-12

APPROVED
Manufacturer's Pole Plan
Approved For Listing As A
Pre-Approved Drawing
WSDOT Bridge & Structures Office
By GB Date 9-8-2011

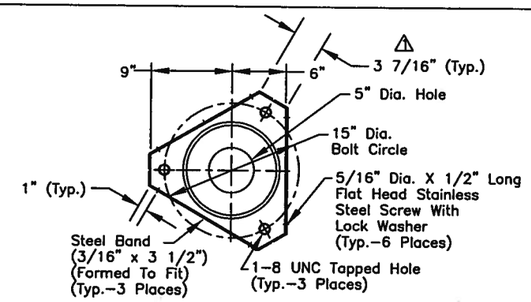

SECTION A–A

NOTE: Welding Of Structures Shall Be In Accordance With The Current AWS Structural Welding Code D1.1.

NOTE: FOR LUMINAIRE POLES WITH SINGLE MAST ARM 12' OR LESS AND DOUBLE MAST ARM 8' OR LESS

MATERIAL DATA		
Component	ASTM Designation	Minimum Yield
Weldable Elbow	A234, GR WPB	35 K.S.I.
Plates	A36	36 K.S.I.
Steel Band	A36	
Galvanizing	A123 & A153	

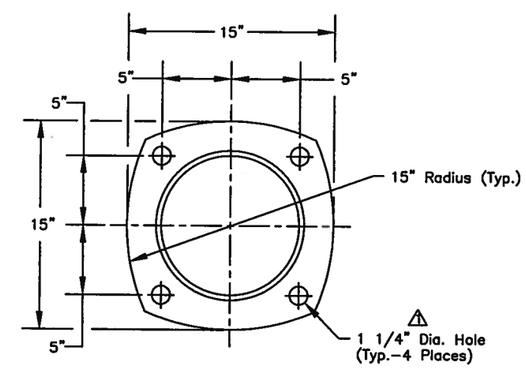

VIEW B–B

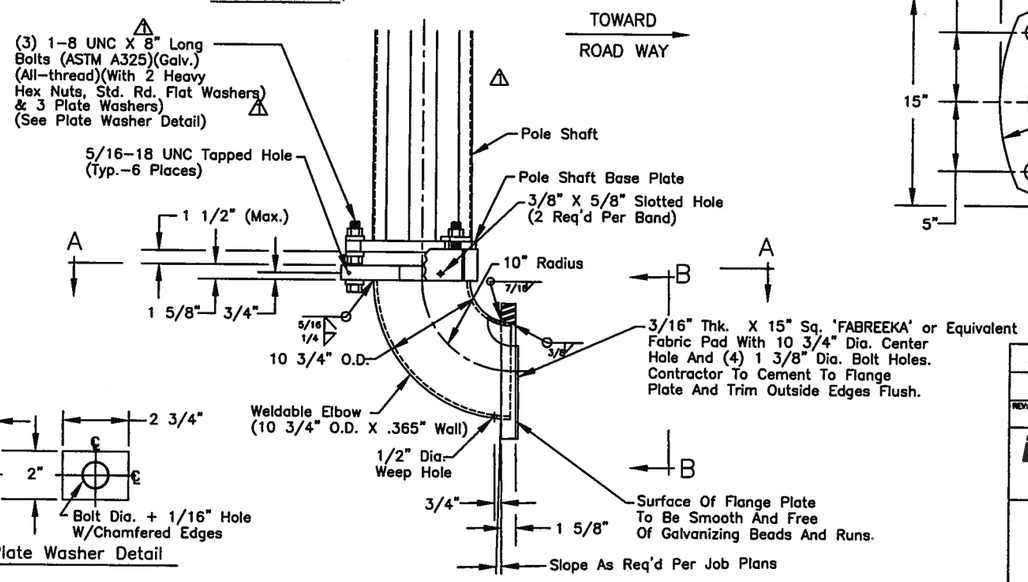

LIGHTING BRACKET DETAIL

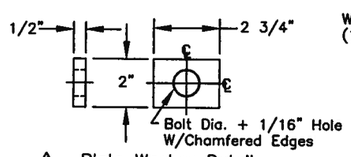

Plate Washer Detail

REV.	DESCRIPTION	BY	DATE
2	ADDED NOTE PER ERF# 8505	IF	3/22/2011
1	REVISED PER RETURNED MARKED–UP DRAWING.	JHG	8/18/2009

KW
909 INDUSTRIAL BLVD. •SUGAR LAND, TEXAS 77478

STATE OF WASHINGTON
'J' & 'T' TYPE ROADWAY POLE
(BRIDGE MOUNT DETAILS)

DRAWN BY:	DATE:	DRAWING NO.:	REV:
JHG	1/11/2008	10–31–RWP–3	2
APPROVED BY:	DATE:		