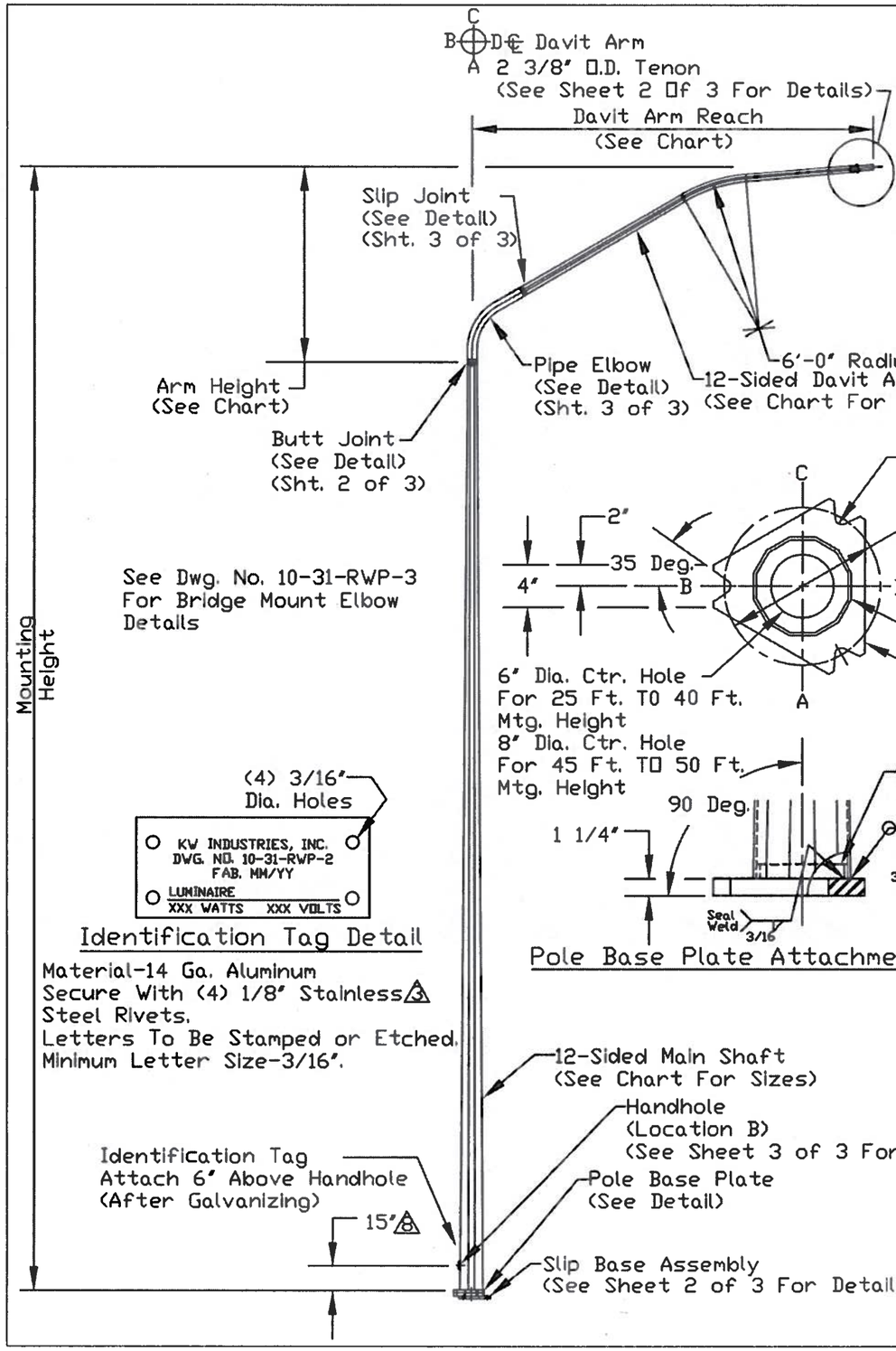

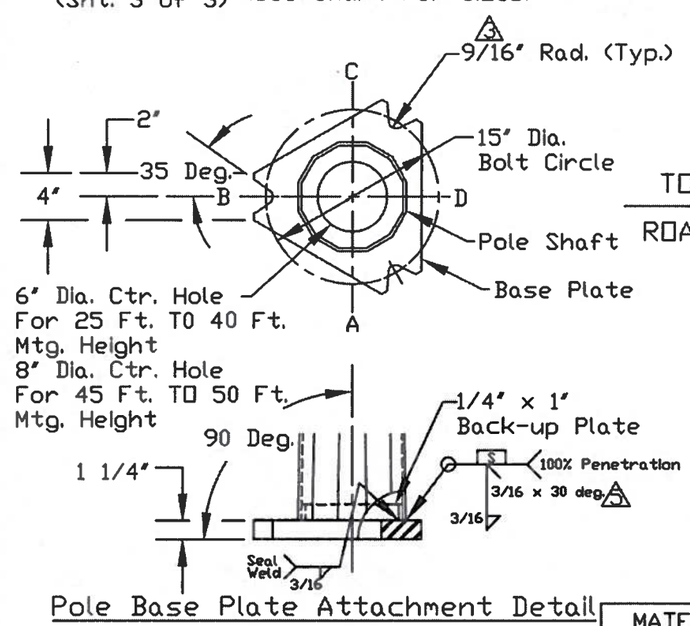

Pole Base Plate Attachment Detail

'T' DAVIT ARM 4				2	MAIN SHAFT (W/6, 8 & 10-FT. ARMS) 2					MAIN SHAFT (W/12, 14 & 16-FT. ARMS) 2				
Arm Reach (FT.)	Base A/F (*) (In.)	End A/F (*) (In.)	Arm Height (In.)	Thk. (In.) (Min.)	Mounting Height (Ft.)	Base A/F (*) (In.)	End A/F (*) (In.)	Length (Ft.)	Thk. (In.) (Min.)	Mounting Height (Ft.)	Base A/F (*) (In.)	End A/F (*) (In.)	Length (Ft.)	Thk. (In.) (Min.)
6.00	3.88	3.00	44.0	.1345	25	7.07	3.88	21.0	.1345	25	7.00	4.38	17.25	.1345
8.00	3.88	3.00	46.0	.1345	30	7.83	3.88	26.0	.1345	30	7.76	4.38	22.25	.1345
10.0	3.88	3.00	48.0	.1345	35	8.59	3.88	31.0	.1345	35	8.52	4.38	27.25	.1345
12.0	4.38	3.00	89.0	.1345	40	9.38	3.88	36.0	.1345	40	9.28	4.38	32.25	.1345
14.0	4.38	3.00	91.0	.1345	45	10.11	3.88	41.0	.1793	45	10.04	4.38	37.25	.1793
16.0	4.38	3.00	93.0	.1345	50	10.87	3.88	46.0	.1793	50	10.8	4.38	42.25	.1793

A/F(*)-Across Flats

APPROVED
Manufacturer's Pole Plan
Approved For Listing As A
Pre-Approved Drawing
WSDOT Bridge & Structures Office
By GB Date 9-2-2014

TOWARD
ROAD WAY

DESIGN: All Standards Are Designed To The 2009 AASHTO Standard 3 Specifications For Structural Supports For Highway Signs, Luminaires And Traffic Signals.
Design Wind Speed-90 MPH w/3 Second Gust.
Design Life/Recurrence Interval-25 Years
Each Structure Can Accomodate a Maximum Of 2 Luminaires
The Design Area Of The Luminaires Is As Follows:
Luminaire Data
Face Area = 3.3 Sq. Ft.
Wind Drag Coefficient = 0.5
Weight = 60 Lbs.
Ice Area = 8.7 Sq. Ft.
3 Sign = 10.0 Sq. Ft. Installed 9'-6" From Base.
FINISH: All Components To Be Hot Dip Galvanized As Per ASTM A123/A153.
3 WELDING: Welding of Structures Shall Be In Accordance With The Latest Edition of AWS D1.1-Steel. Longitudinal Seam Weld Is 60% Minimum Penetration Except 6 Inches From End of Section at Flange, Base Plate And Slip Joint Is 100% Penetration.

THOMAS S. LACH
STATE OF WASHINGTON
42082
REGISTERED
PROFESSIONAL ENGINEER
8/26/2014
Expires 11/17/2014

MATERIAL DATA (UNLESS OTHERWISE NOTED)	
Components	Grade
Handhole Ring Plates 5	ASTM A36, Gr. 36
All Tapered Tubes 2	ASTM A572, A1011, A606 Gr. 50 (Min.)
Base Plate	ASTM A572 Gr. 50 6
Slip Base Plates	ASTM A572 Gr. 50 1 6
Pipe Tenons	ASTM A53 Gr. B ASTM A500 Gr. B
Anchor Bolts	ASTM F1554 Gr. 105 1
Slip Fit Bolts	ASTM A325, TYPE 1
Nuts	ASTM A563-DH
Flat Washers	ASTM F436

REV.	DESCRIPTION	BY	DATE
8	REVISED PER DWG MARKUPS, ERF# 13406	IF	8/26/2014
7	CHANGED WIDTH OF HH RING FROM 2 1/2" TO 2" PER ERF#13236	IF	7/18/2014
6	ADDED MATL. SPEC TO BASE AND SLIP PLATES	IF	4/16/2014
5	REVISED PER RETURNED MARKED-UP DRAWING.	JHG	10/20/2009
4	REVISED PER RETURNED MARKED-UP DRAWING.	JHG	9/16/2009
3	REVISED PER RETURNED MARKED-UP DRAWING.	JHG	8/18/2009
2	REVISED AS REQUIRED. A606 WAS A607. CHANGED WORDING OF THICKNESS OF DAVIT ARM AND MAIN SHAFTS-ADDED MINIMUM.	JHG	2/20/2009
1	REVISED PER LACH ENGINEERING REVISIONS.	JHG	10/8/2008

KW
909 INDUSTRIAL BLVD. • SUGAR LAND, TEXAS 77478

STATE OF WASHINGTON
'T' TYPE ROADWAY POLE

SHT. 1 OF 3

DRAWN BY: JHG	DATE: 1/10/2008	DRAWING NO: 10-31-RWP-2	REV: 8
APPROVED BY:	DATE:		

APPROVED
Manufacturer's Pole Plan
Approved For Listing As A
Pre-Approved Drawing
WSDOT Bridge & Structures Office
By GB Date 9-2-2014

CONNECTOR BOLT			ANCHOR BOLT			
Mounting Height (Ft.)	Dia. (In.)	Length (In.)	Dia. (In.)	Length (In.)	Bearing Plate Sq. (In.)	Bearing Plate Thk. (In.)
25 to 40	1	5 1/2	1	54	4	3/8
45 to 50	1 1/8	5 1/2	1 1/8	66	4	3/8

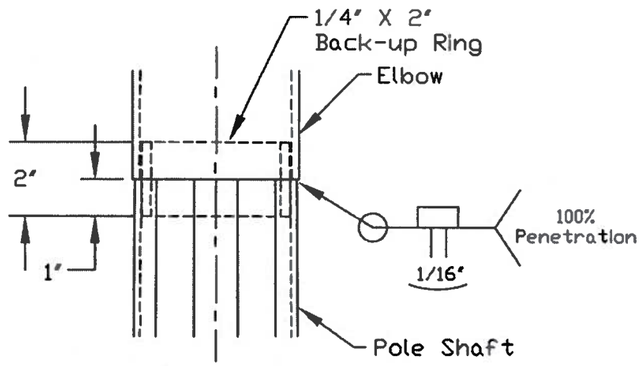

Butt Joint Detail

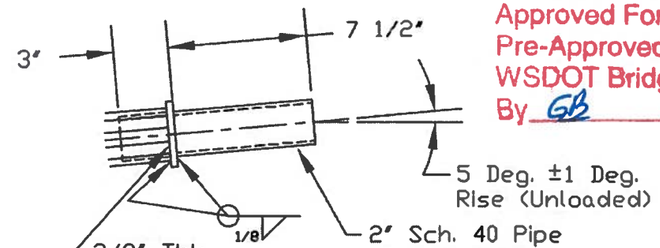

Tenon Detail

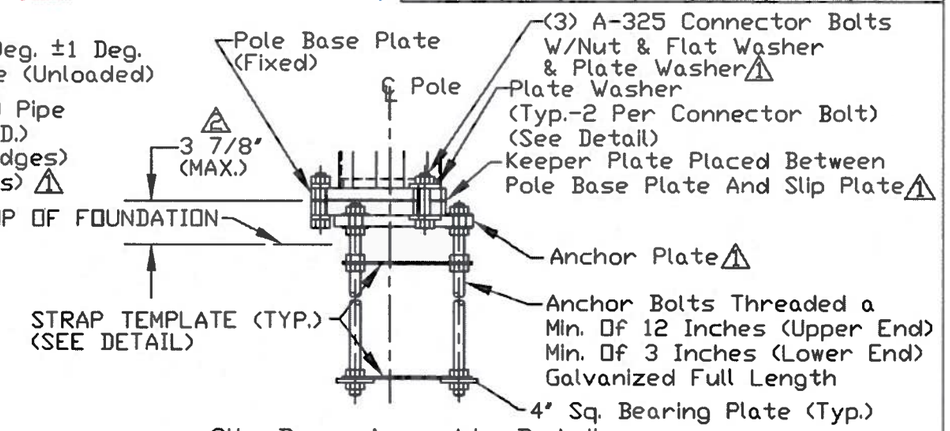

Slip Base Assembly Detail

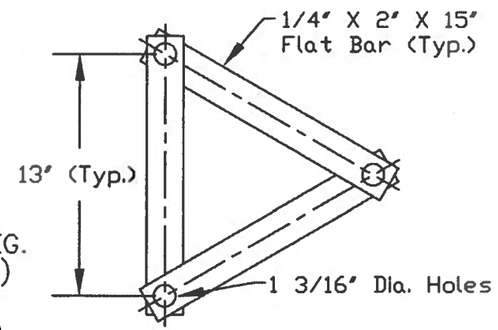

Strap Template Detail
(Placed Over Anchor Bolts)

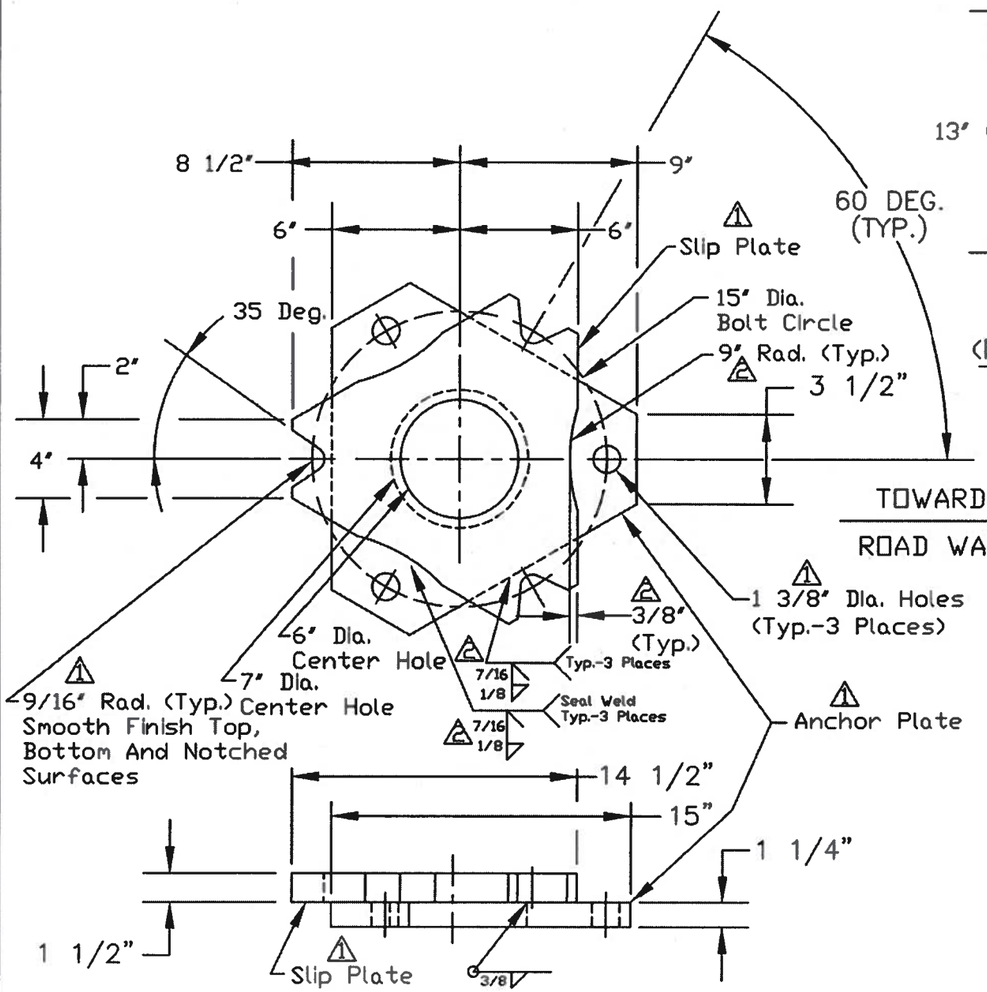

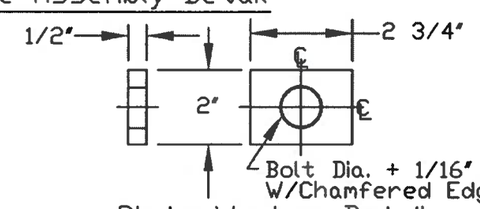

Plate Washer Detail

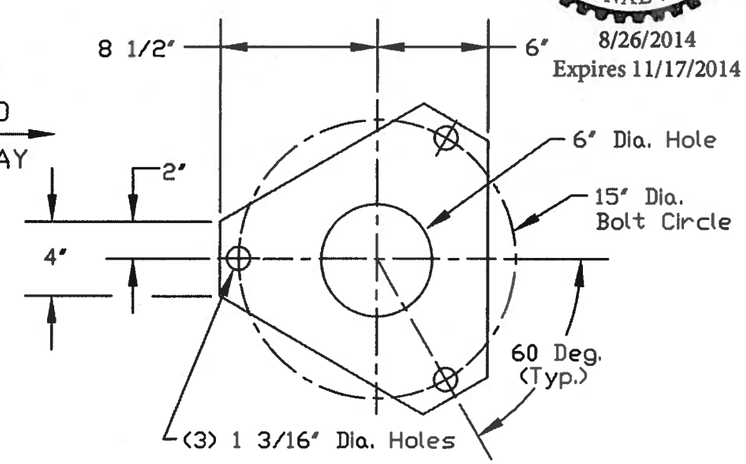

Keeper Plate Detail
(Galvanized 28 Ga. Sheet)

THOMAS S. LACH
STATE OF WASHINGTON
42082
REGISTERED
PROFESSIONAL ENGINEER
8/26/2014
Expires 11/17/2014

REV:	DESCRIPTION:	BY:	DATE:
8	REVISED PER DWG MARKUPS, ERF# 13406	IF	8/26/2014
7	CHANGED WIDTH OF HH RING FROM 2 1/2" TO 2" PER ERF#13236	IF	7/18/2014
6	ADDED MATL. SPEC TO BASE AND SLIP PLATES	IF	4/16/2014
5	CHANGED REVISION NUMBER TO MATCH REVISION NUMBER ON SHT 1 OF 3 PER WASHINGTON D.O.T. REQUEST.	JHG	11/5/2009
2	REVISED PER RETURNED MARKED-UP DRAWING.	JHG	10/20/2009
1	REVISED PER RETURNED MARKED-UP DRAWING.	JHG	8/18/2009

KW
909 INDUSTRIAL BLVD. • SUGAR LAND, TEXAS 77478

STATE OF WASHINGTON
'T' TYPE ROADWAY POLE

SHT. 2 OF 3

DRAWN BY:	DATE:	DRAWING NO:	REV:
JHG	1/10/2008	10-31-RWP-2	8
APPROVED BY:	DATE:		

APPROVED
Manufacturer's Pole Plan
Approved For Listing As A
Pre-Approved Drawing
WSDOT Bridge & Structures Office
By GB Date 9-2-2014

THOMAS S. LACH
STATE OF WASHINGTON
42082
REGISTERED
PROFESSIONAL ENGINEER
8/26/2014
Expires 11/17/2014

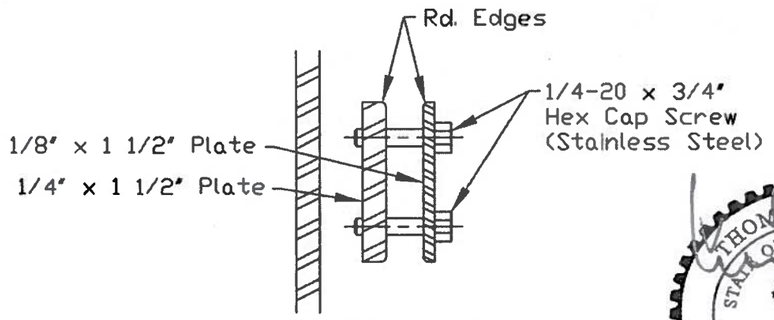

Section F-F
Conductor Mtg. Bracket Detail

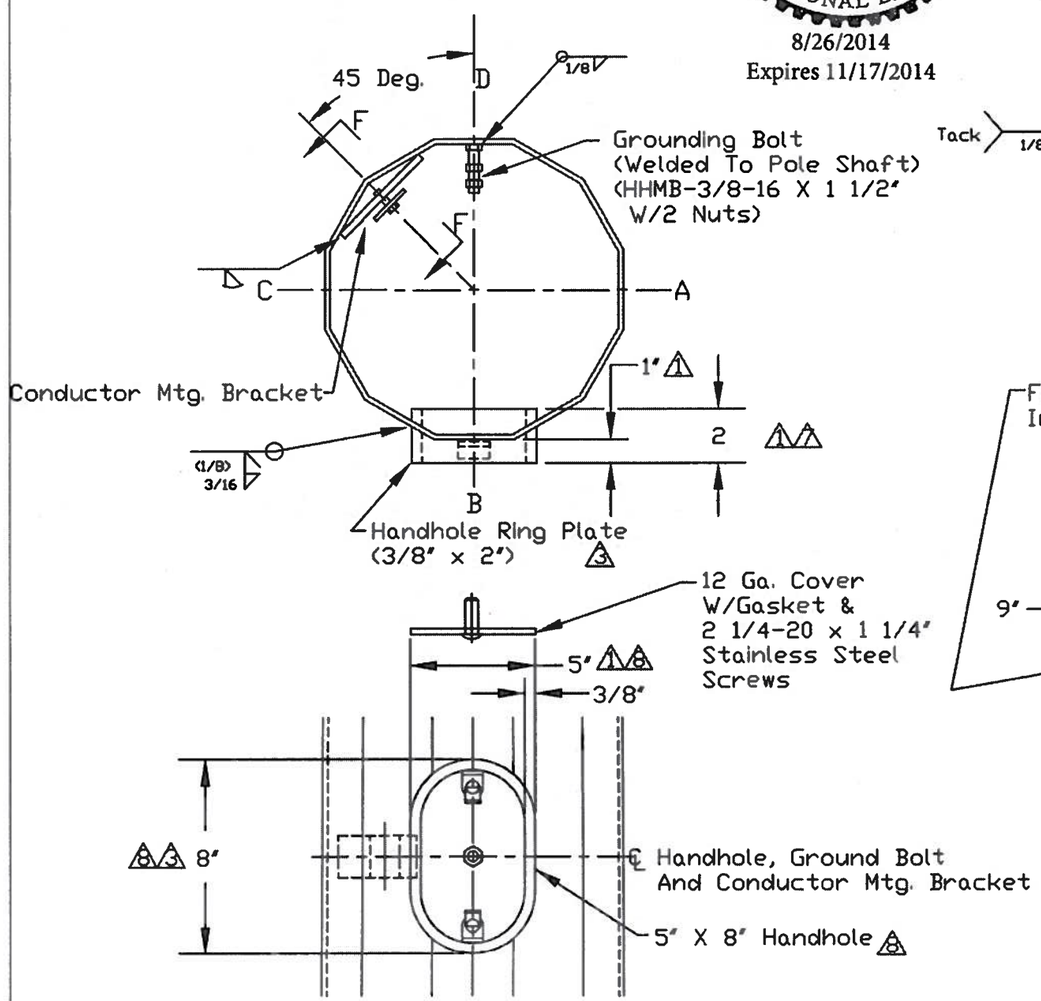

Handhole Detail

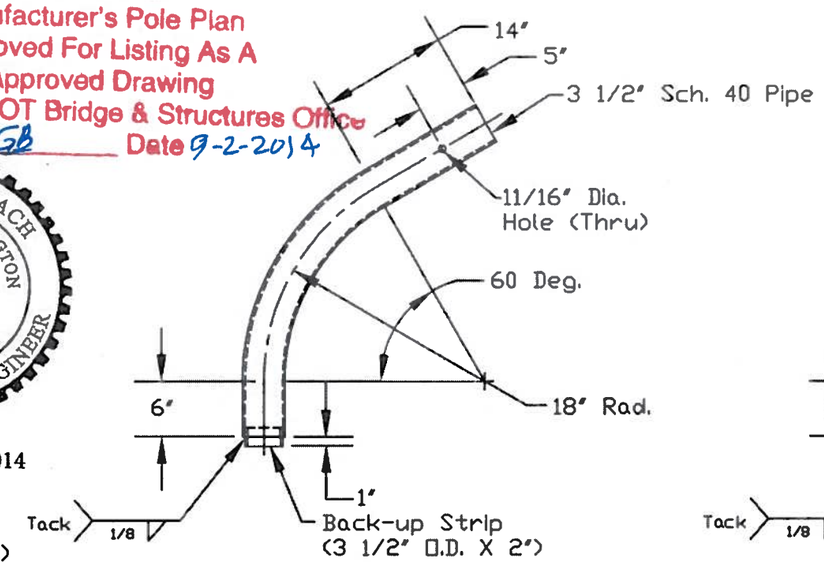

Elbow Detail
(For 6, 8, & 10-Ft. Arms)

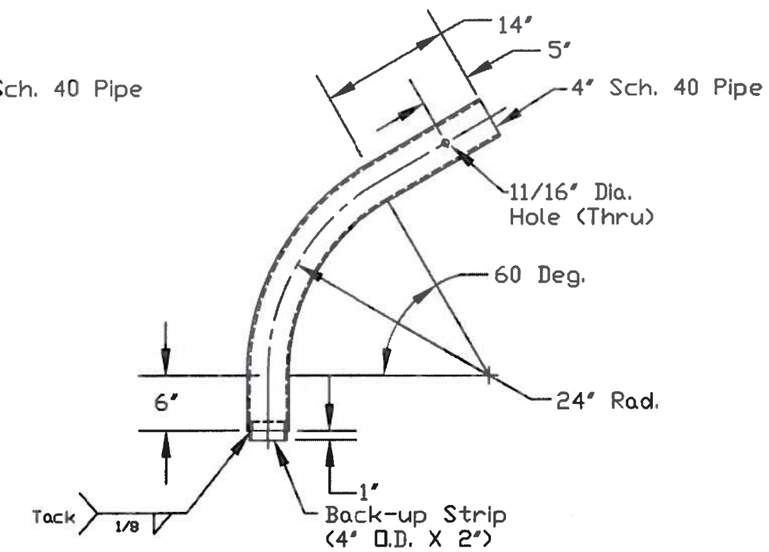

Elbow Detail
(For 12, 14, & 16-Ft. Arms)

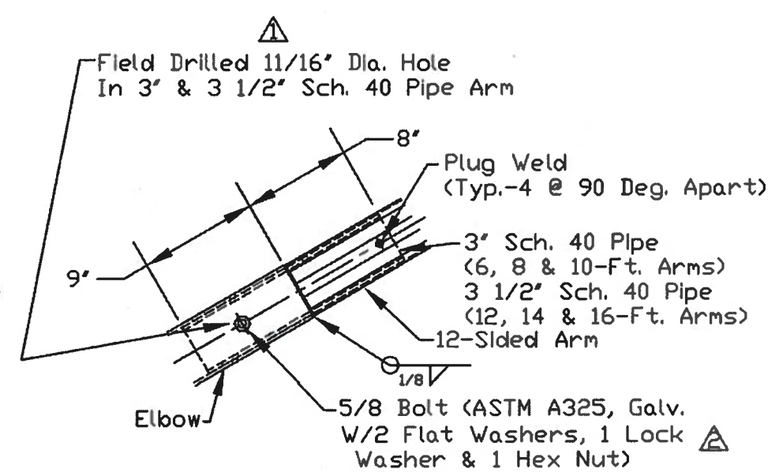

Slip Joint Detail

REV.	DESCRIPTION	BY	DATE
8	REVISED PER DWG MARKUPS, ERF# 13406	IF	8/26/2014
7	CHANGED WIDTH OF HH RING FROM 2 1/2" TO 2" PER ERF#13236	IF	7/18/2014
6	ADDED MATL. SPEC TO BASE AND SLIP PLATES	IF	4/16/2014
5	CHANGED REVISION NUMBER TO MATCH REVISION NUMBER ON SHT 1 OF 3 PER WASHINGTON D.O.T. REQUEST.	JHG	11/5/2009
3	REVISED PER RETURNED MARKED-UP DRAWING.	JHG	10/20/2009
2	REVISED PER RETURNED MARKED-UP DRAWING.	JHG	9/16/2009
1	REVISED PER RETURNED MARKED-UP DRAWING.	JHG	8/18/2009

KW
909 INDUSTRIAL BLVD. • SUGAR LAND, TEXAS 77478

STATE OF WASHINGTON
'T' TYPE ROADWAY POLE

SHT. 3 OF 3

DRAWN BY:	JHG	DATE:	1/10/2008	DRAWING NO:	10-31-RWP-2	REV:	8
APPROVED BY:		DATE:					