THOMAS S. LACH
STATE OF WASHINGTON
42082
REGISTERED
PROFESSIONAL ENGINEER

7/20/2014
Expires 11/17/2014

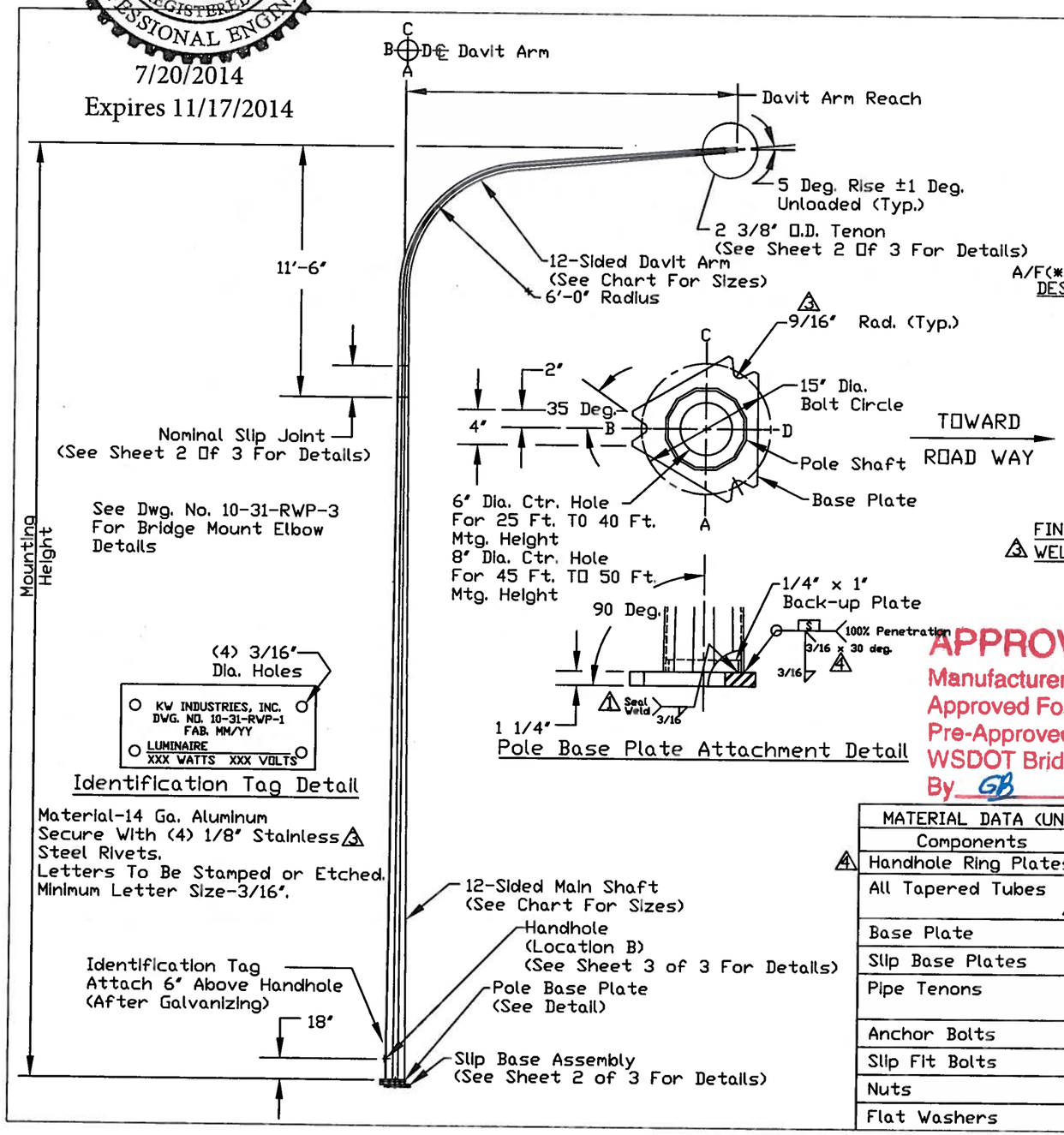

DAVIT ARM					MAIN SHAFT				
Arm Reach (FT.)	Base A/F (*) (In.)	End A/F (*) (In.)	Length (Ft.)	Thk. (In.) (Min.)	Mounting Height (Ft.)	Base A/F (*) (In.)	End A/F (*) (In.)	Length (Ft.)	Thk. (In.) (Min.)
6.00	6.16	4.35	13.42	.1793	25	7.52	5.49	15.0	.1345
8.00	6.16	4.08	15.42	.1793	30	8.19	5.49	20.0	.1345
10.0	6.16	3.75	17.42	.1793	35	8.87	5.49	25.0	.1345
12.0	6.16	3.54	19.42	.1793	40	9.53	5.49	30.0	.1345
14.0	6.16	3.27	21.42	.1793	45	10.23	5.49	35.0	.1793
16.0	6.16	3.00	23.42	.1793	50	10.89	5.49	40.0	.1793

A/F(*)-Across Flats

DESIGN: All Standards Are Designed To The 2009 AASHTO Standard Specifications For Structural Supports For Highway Signs, Luminaires And Traffic Signals.
Design Wind Speed-90 MPH w/3 Second Gust.
Design Life/Recurrence Interval-25 Years
Each Structure Can Accomodate a Maximum Of 2 Luminaires
The Design Area Of The Luminaires Is As Follows:
Luminaire Data
Face Area = 3.3 Sq. Ft.
Wind Drag Coefficient = 0.5
Weight = 60 Lbs.
Ice Area = 8.7 Sq. Ft.
Sign = 10.0 Sq. Ft. Installed 9'-6" From Base.

FINISH: All Components To Be Hot Dip Galvanized As Per ASTM A123/A153.

WELDING: Welding of Structures Shall Be In Accordance With The Latest Edition of AWS D1.1-Steel. Longitudinal Seam Weld Is 60% Minimum Penetration Except 6 Inches From End of Section at Flange, Base Plate And Slip Joint Is 100% Penetration.

APPROVED
Manufacturer's Pole Plan
Approved For Listing As A
Pre-Approved Drawing
WSDOT Bridge & Structures Office
By GB Date 7-23-2014

MATERIAL DATA (UNLESS OTHERWISE NOTED)	
Components	Grade
Handhole Ring Plates	ASTM A36, Gr. 36
All Tapered Tubes	ASTM A572, A1011, A606 Gr. 50 (Min.)
Base Plate	ASTM A572 Gr. 50
Slip Base Plates	ASTM A572 Gr. 50
Pipe Tenons	ASTM A53 Gr. B ASTM A500 Gr. B
Anchor Bolts	ASTM F1554 Gr. 105
Slip Fit Bolts	ASTM A325, TYPE 1
Nuts	ASTM A563-DH
Flat Washers	ASTM F436

REV.	DESCRIPTION	BY	DATE
6	CHANGED WIDTH OF HH RING FROM 2 1/2" TO 2" PER ERF#13236	IF	7/18/2014
5	ADDED MATL. SPEC TO BASE AND SLIP PLATES	IF	4/16/2014
4	REVISED PER RETURNED MARKED-UP DRAWING.	JHG	10/19/2009
3	REVISED PER RETURNED MARKED-UP DRAWING.	JHG	8/18/2009
2	REVISED AS REQUIRED. A606 WAS A607. CHANGED WORDING OF THICKNESS OF DAVIT ARM AND MAIN SHAFTS-ADDED MINIMUM.	JHG	2/20/2009
1	REVISED PER LACH ENGINEERING REVISIONS.	JHG	10/8/2008

KW
909 INDUSTRIAL BLVD. • SUGAR LAND, TEXAS 77478

STATE OF WASHINGTON
'J' TYPE ROADWAY POLE

SHT. 1 OF 3

DRAWN BY:	DATE:	DRAWING NO:	REV:
JHG	9/24/2007	10-31-RWP-1	6
APPROVED BY:	DATE:		

THOMAS S. LACH
STATE OF WASHINGTON
42082
REGISTERED
PROFESSIONAL ENGINEER

7/20/2014

Expires 11/17/2014

CONNECTOR BOLT			ANCHOR BOLT			
Mounting Height (Ft.)	Dia. (In.)	Length (In.)	Dia. (In.)	Length (In.)	Bearing Plate Sq. (In.)	Bearing Plate Thk. (In.)
25 to 40	1	5 1/2	1	54	4	3/8
45 to 50	1 1/8	5 1/2	1 1/8	66	4	3/8

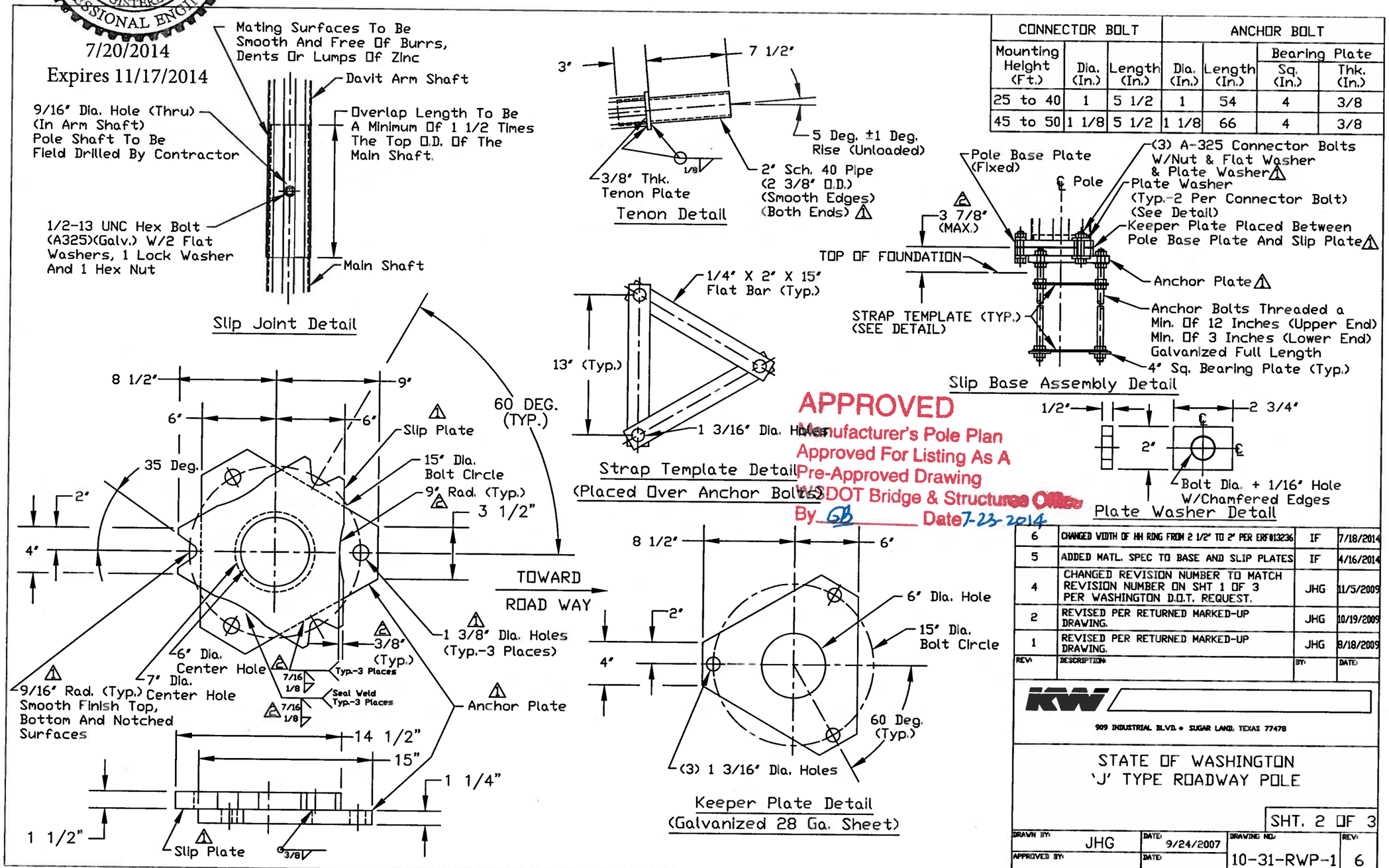

APPROVED
Manufacturer's Pole Plan
Approved For Listing As A
Pre-Approved Drawing
WSDOT Bridge & Structures Office
By GB Date 7-23-2014

REV.	DESCRIPTION	BY:	DATE:
6	CHANGED WIDTH OF HH RING FROM 2 1/2" TO 2" PER ERF#13236	IF	7/18/2014
5	ADDED MATL. SPEC TO BASE AND SLIP PLATES	IF	4/16/2014
4	CHANGED REVISION NUMBER TO MATCH REVISION NUMBER ON SHT 1 OF 3 PER WASHINGTON D.O.T. REQUEST.	JHG	11/5/2009
2	REVISED PER RETURNED MARKED-UP DRAWING.	JHG	10/19/2009
1	REVISED PER RETURNED MARKED-UP DRAWING.	JHG	8/18/2009

KW
909 INDUSTRIAL BLVD. • SUGAR LAND, TEXAS 77478

STATE OF WASHINGTON
'J' TYPE ROADWAY POLE

SHT. 2 OF 3

DRAWN BY:	DATE:	DRAWING NO.	REV.
JHG	9/24/2007	10-31-RWP-1	6
APPROVED BY:	DATE:		

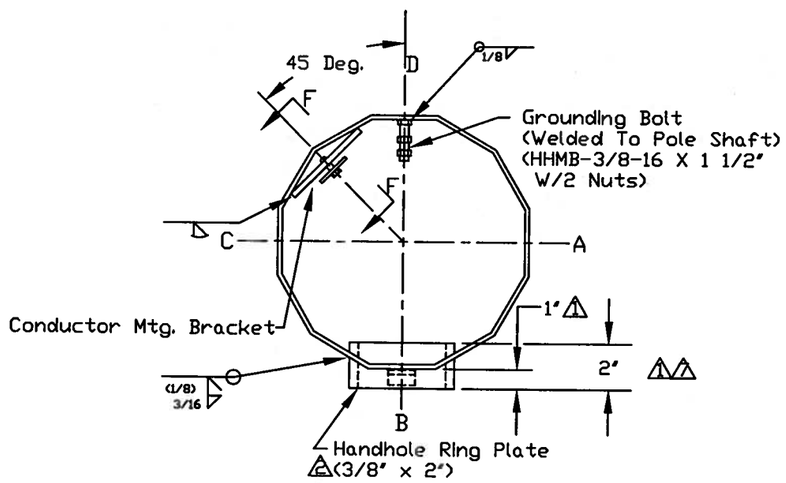

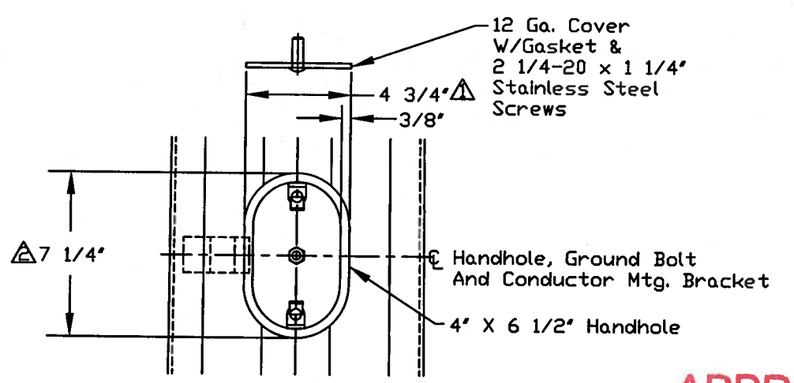

Handhole Detail

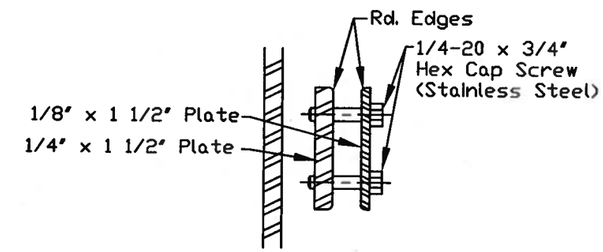

Section F-F

Conductor Mtg. Bracket Detail

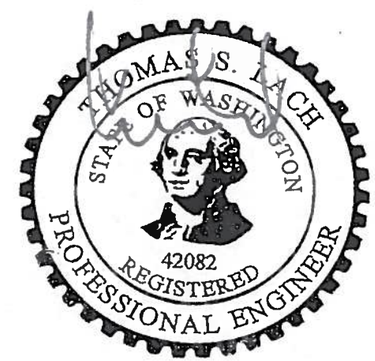

7/20/2014
Expires 11/17/2014

APPROVED
Manufacturer's Pole Plan
Approved For Listing As A
Pre-Approved Drawing
WSDOT Bridge & Structures Office
By GB Date 7-23-2014

REV.	DESCRIPTION	BY	DATE
6	CHANGED WIDTH OF HH RING FROM 2 1/2" TO 2" PER ERF#13236	IF	7/18/2014
5	ADDED MATL. SPEC TO BASE AND SLIP PLATES	IF	4/16/2014
4	CHANGED REVISION NUMBER TO MATCH REVISION NUMBER ON SHT 1 OF 3 PER WASHINGTON D.O.T. REQUEST.	JHG	11/5/2009
2	REVISED PER RETURNED MARKED-UP DRAWING.	JHG	10/19/2009
1	REVISED PER RETURNED MARKED-UP DRAWING.	JHG	8/18/2009

KW

909 INDUSTRIAL BLVD. • SUGAR LAND, TEXAS 77478

STATE OF WASHINGTON
'J' TYPE ROADWAY POLE

SHT. 3 OF 3

DRAWN BY:	DATE:	DRAWING NO.	REV.
JHG	9/27/2007	10-31-RWP-1	6
APPROVED BY:	DATE:		