LUMINAIRE ARM TYPE 'T'

Luminaire Arm Reach 'C' (Ft.)	AFB* (In.)	AFT* (In.)	THK (In.) 1 (Min.)	Shaft Length (Ft.)
6.00	4.11	3.45	.1345	5.84
8.00	4.11	3.23	.1345	7.84
10.0	4.11	3.00	.1345	9.84
12.0	4.57	3.38	.1345	12.49
14.0	4.57	3.19	.1345	14.49
16.0	4.57	3.00	.1345	16.49

MAIN SHAFT DATA

Mast Arm Length 'B' (Ft.)	AFB* (In.)	AFT* (In.)	THK (In.)	Shaft Length (Ft.)
15.0 to 45.0	13.0	12.0	.250	22.0
46.0 to 65.0	16.0	15.0	.250	22.0

LUMINAIRE ARM EXTENSION SHAFT DATA (6, 8 & 10-FT. LUMINAIRE ARMS)

Luminaire Arm Mounting Ht. 'A2' (Ft.)	AFB* (In.)	AFT* (In.)	Shaft Length (Ft.)	THK (In.) 1 (Min.)
30.0	3.92	3.55	3.27	.1345
35.0	4.48	3.55	8.27	.1345
40.0	5.05	3.55	13.27	.1345
45.0	5.61	3.55	18.27	.1345
50.0	6.18	3.55	23.27	.1345

LUMINAIRE ARM EXTENSION SHAFT DATA (12, 14 & 16-FT. LUMINAIRE ARMS)

Luminaire Arm Mounting Ht. 'A2' (Ft.)	AFB* (In.)	AFT* (In.)	Shaft Length (Ft.)	THK (In.) 1 (Min.)
35.0	4.53	4.10	4.52	.1345
40.0	5.00	4.10	9.52	.1345
45.0	5.48	4.10	14.52	.1345
50.0	5.95	4.10	19.52	.1345

MATERIAL DATA (UNLESS OTHERWISE NOTED)

COMPONENT	GRADE
HANDHOLE RING 4	ASTM A36
TAPERED TUBES 1	ASTM A572, A1011 A606, GR 50 (MIN.)
BASE PLATE	ASTM A36
FLANGE PLATES	ASTM A36
PIPE TENONS	ASTM A53, GR B ASTM A500, GR B
ANCHOR BOLTS	ASTM F1554, GR 105
CONNECTOR BOLTS	ASTM A325,TYPE 1
NUTS	ASTM A563-DH
FLAT WASHERS	ASTM F436

NOTES:

Mast Arms: Mast Arms With Lengths From 0 to 25 Ft. Are Designed To Support (2) Traffic Signals And (2) Sign Panels. Mast Arms With Lengths From 26 to 55 Ft. Are Designed To Support (3) Traffic Signals And (3) Sign Panels. Mast Arms With Lengths From 56 to 65 Ft. Are Designed To Support (4) Traffic Signals And (4) Sign Panels.

Finish: All Components To Be Hot Dip Galvanized As Per ASTM A123 & A153. All Tapered Tubes Are 12 Sided.

5 Welding: Welding of structures shall be in accordance with the latest edition of the AWS Structural Welding Code D1.1-STEEL. Longitudinal seam weld is 60% minimum penetration except for 6 inches from end of section at flange, base plate and slip joint is 100% penetration.

CAFL AT CRITICAL CONNECTION: 2

Pole To Base Plate Connection
- A. Socket Detail W/Fillet Weld=E
- B. Full Penetration Weld=D

Arm To Simplex Plate Connection:
- A. Socket Detail W/Fillet Weld=E
- B. Full Penetration Weld=D

Simplex Gussets=E' 3

Pole Shaft=B' 3

APPROVED
Manufacturer's Pole Plan
Approved For Listing As A
Pre-Approved Drawing
WSDOT Bridge & Structures Office
By GB Date 8-16-2015

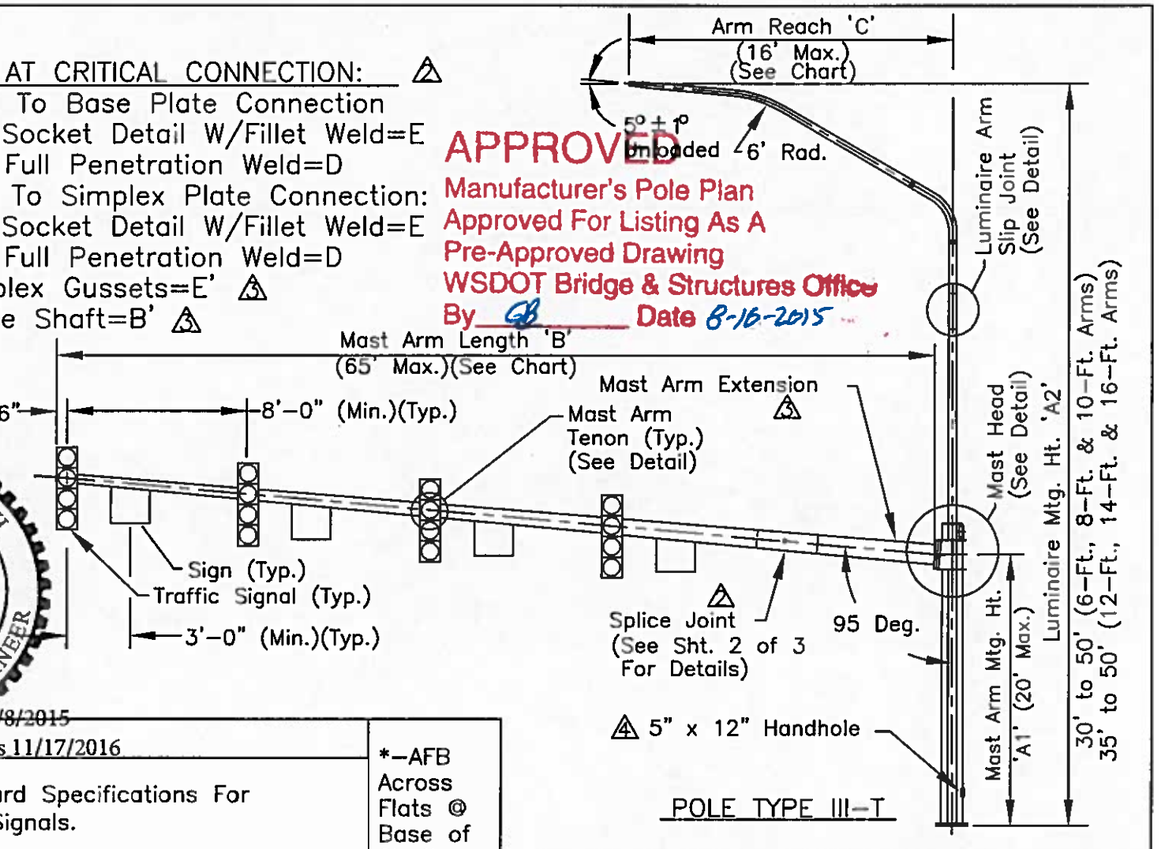

POLE TYPE III-T

THOMAS S. LACH
STATE OF WASHINGTON
42082
REGISTERED PROFESSIONAL ENGINEER
8/8/2015
Expires 11/17/2016

LOADING DATA 2

DESIGN: All Standards are Designed to the 2009 AASHTO Standard Specifications For Structural Supports For Highway Signs, Luninaires And Signals.
- Design Wind Speed-90 MPH W/3 Second Gust.
- Design Life/Recurrence Interval-50 Years.
- Fatigue Category-III (Galloping, Natural & Truck Gusts)
- Maximum Truck Gust Wind Speed-65 MPH.
- Structures Have Load Capacity As Shown In Chart Below.
- Design Areas Of Signs & Signals As Follows:

Signal: Face Area=9.2 Sq. Ft. Weight=60 Lb. Ice Area=30 Sq. Ft.

Sign: Face Area=5.0 Sq. Ft. Weight=60 Lb. Ice Area=5.0 Sq. Ft.

*-AFB Across Flats @ Base of Shaft.

*-AFT Across Flats @ Top of Shaft.

REV:	DESCRIPTION:	BY:	DATE:
7	REVISED PER MARK UPS ERF# 14944	IF	8/6/2015
6	ADDED PIPE CALLOUT PER ERF# 13327	MI	8/7/2014
5	REVISED PER MARKUPS ON ERF# 8512	IF	3/23/2011
4	REVISED PER RETURNED MARKED-UP SUBMITTAL DRAWINGS.	JHG	11/17/2009
3	REVISED PER RETURNED MARKED-UP SUBMITTAL DRAWINGS.	JHG	9/17/2009
2	REVISED PER RETURNED MARKED-UP SUBMITTAL DRAWINGS.	JHG	8/24/2009
1	REVISED AS REQUIRED. A606 WAS A607. CHANGED WORDING OF THICKNESS OF LUMINAIRE ARM, EXTENSION AND MAST ARM SHAFTS-ADDED MINIMUM.	JHG	2/19/2009

MAST ARM

Mast Arm Length 'B' (Max.) (Ft.)	MAST ARM AFB* (In.)	MAST ARM AFT* (In.)	MAST ARM THK (In.) 1 (Min.)	MAST ARM Shaft Length (Ft.)	MAST ARM EXTENSION AFB (In.)	MAST ARM EXTENSION AFT (In.)	MAST ARM EXTENSION THK (In.)	MAST ARM EXTENSION Shaft Length (Ft.)	Connector Bolts Dia. (In.)	Connector Bolts Length (In.)	MAST ARM FLANGE PLATE 'D' (In.)	'E' (In.)	'F' (In.)	POLE FLANGE PLATE 'G' (In.)	'H' (In.)	'J' (In.)	Sign & Signal Maximum Loading XYZ	Base Plate 'K' (In.)	'L' (In.)	'M' (In.)	'N' (In.)	Anchor Bolts Length (In.)	Anchor Bolts Dia. (In.)
15.0	7.34	5.00	.1345	15.0	—	—	—	—	1.25	5.00	21.5	17.0	17.0	12.0	1.38	1.50	321	18.5	18.0	1.75	1.50	54.0	1.50
20.0	8.12	5.00	.1345	20.0	—	—	—	—	1.25	5.00	21.5	17.0	17.0	12.0	1.38	1.50	463	18.5	18.0	1.75	1.50	54.0	1.50
25.0	8.90	5.00	.1345	25.0	—	—	—	—	1.25	5.00	21.5	17.0	17.0	12.0	1.38	1.50	605	18.5	18.0	1.75	1.50	54.0	1.50
30.0	9.68	5.00	.1793	30.0	—	—	—	—	1.25	5.00	21.5	17.0	17.0	12.0	1.38	1.50	924	18.5	18.0	1.75	1.50	54.0	1.50
35.0	10.5	5.00	.1793	35.0	—	—	—	—	1.25	5.00	21.5	17.0	17.0	12.0	1.38	1.50	1117	18.5	18.0	1.75	1.50	54.0	1.50
40.0	11.25	5.00	.1793	40.0	—	—	—	—	1.25	5.00	21.5	17.0	17.0	12.0	1.38	1.50	1350	18.5	18.0	1.75	1.50	54.0	1.50
45.0	12.0	5.00	.1793	45.0	—	—	—	—	1.25	5.00	21.5	17.0	17.0	12.0	1.38	1.50	1563	18.5	18.0	1.75	1.50	54.0	1.50
50.0	11.25	5.00	.1793	40.0	12.42	10.44	.250	12.5	1.50	6.50	25.0	20.0	20.0	15.0	1.63	2.00	1776	22.5	22.0	2.25	2.00	60.0	2.00
55.0	11.25	5.00	.1793	40.0	13.19	10.44	.250	17.5	1.50	6.50	25.0	20.0	20.0	15.0	1.63	2.00	1989	22.5	22.0	2.25	2.00	60.0	2.00
60.0	11.25	5.00	.1793	40.0	13.94	10.44	.250	22.5	1.50	6.50	25.0	20.0	20.0	15.0	1.63	2.00	2691	22.5	22.0	2.25	2.00	60.0	2.00
65.0	11.25	5.00	.1793	40.0	14.75	10.44	.250	27.5	1.50	6.50	25.0	20.0	20.0	15.0	1.63	2.00	2975	22.5	22.0	2.25	2.00	60.0	2.00

KW
909 INDUSTRIAL BLVD. •SUGAR LAND, TEXAS 77478

STATE OF WASHINGTON
TYPE III-T TRAFFIC SIGNAL STRUCTURES

SHT. 1 OF 3

DRAWN BY:	DATE:	DRAWING NO.:	REV:
JHG	1/12/2009	10-200-TSP-3	7
APPROVED BY:	DATE:		

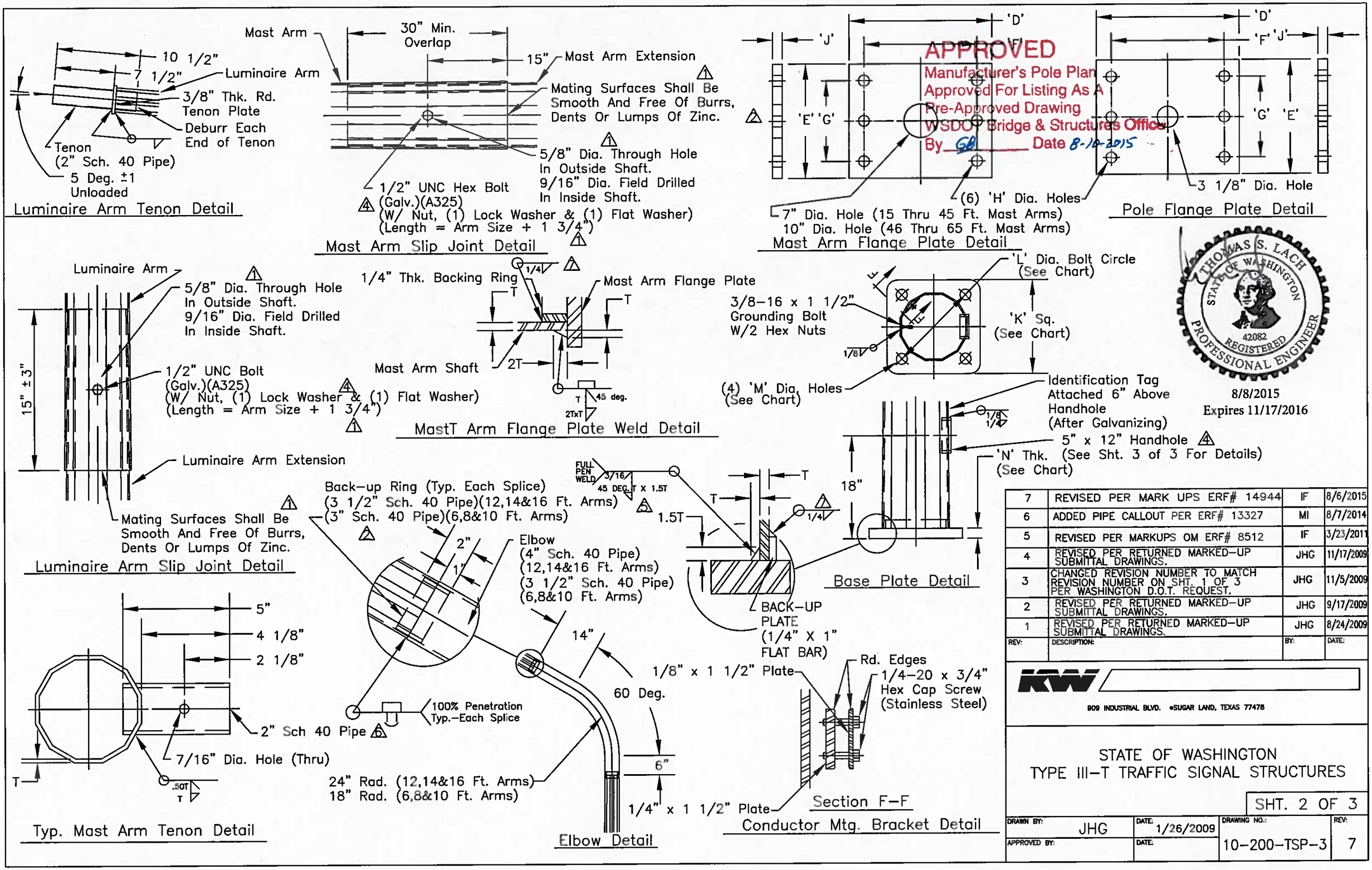

REV:	DESCRIPTION:	BY:	DATE:
7	REVISED PER MARK UPS ERF# 14944	IF	8/6/2015
6	ADDED PIPE CALLOUT PER ERF# 13327	MI	8/7/2014
5	REVISED PER MARKUPS OM ERF# 8512	IF	3/23/2011
4	REVISED PER RETURNED MARKED-UP SUBMITTAL DRAWINGS.	JHG	11/17/2009
3	CHANGED REVISION NUMBER TO MATCH REVISION NUMBER ON SHT. 1 OF 3 PER WASHINGTON D.O.T. REQUEST.	JHG	11/5/2009
2	REVISED PER RETURNED MARKED-UP SUBMITTAL DRAWINGS.	JHG	9/17/2009
1	REVISED PER RETURNED MARKED-UP SUBMITTAL DRAWINGS.	JHG	8/24/2009

KW

909 INDUSTRIAL BLVD. •SUGAR LAND, TEXAS 77478

STATE OF WASHINGTON
TYPE III-T TRAFFIC SIGNAL STRUCTURES

SHT. 2 OF 3

DRAWN BY:	DATE:	DRAWING NO.:	REV:
JHG	1/26/2009	10-200-TSP-3	7
APPROVED BY:	DATE:		

APPROVED
Manufacturer's Pole Plan
Approved For Listing As A
Pre-Approved Drawing
WSDOT Bridge & Structures Office
By GB Date 8-10-2015

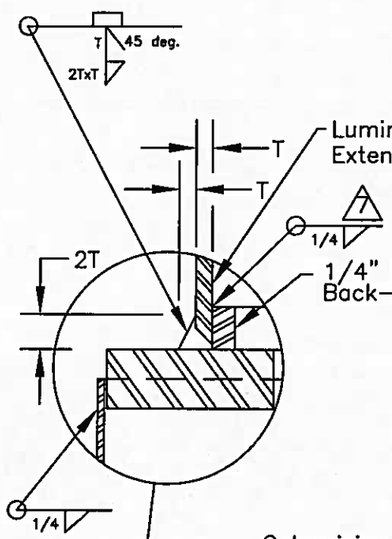

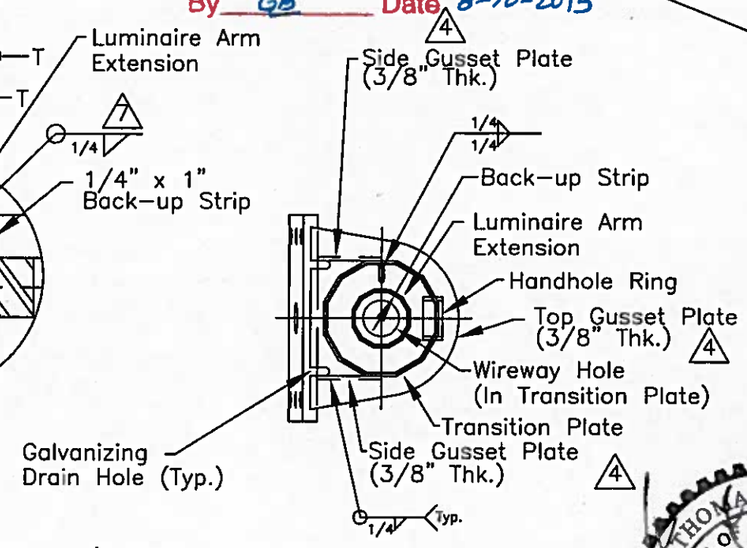

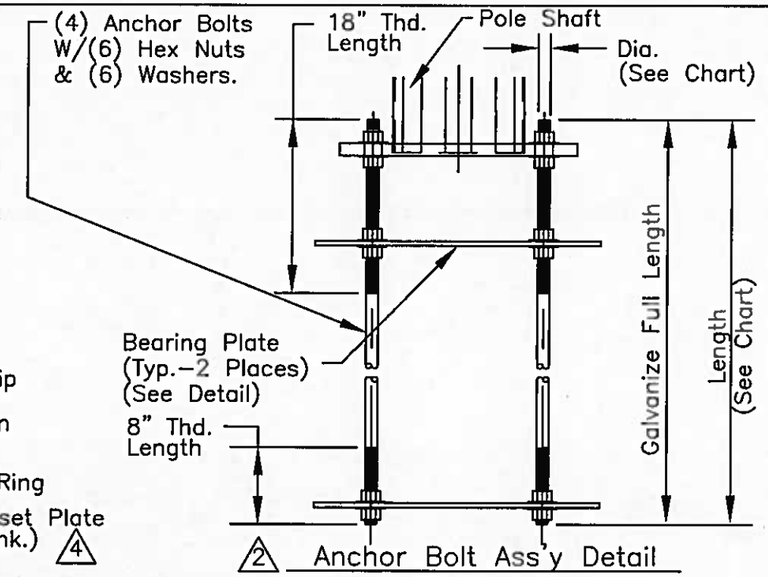

2 Anchor Bolt Ass'y Detail

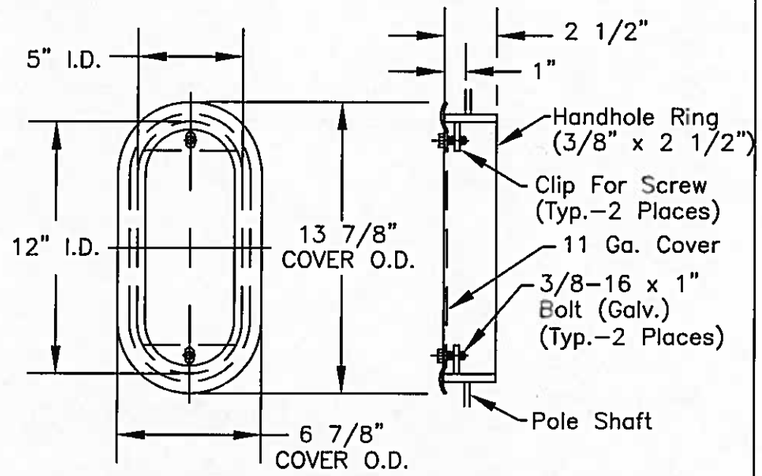

Handhole Ring Ass'y Detail 4

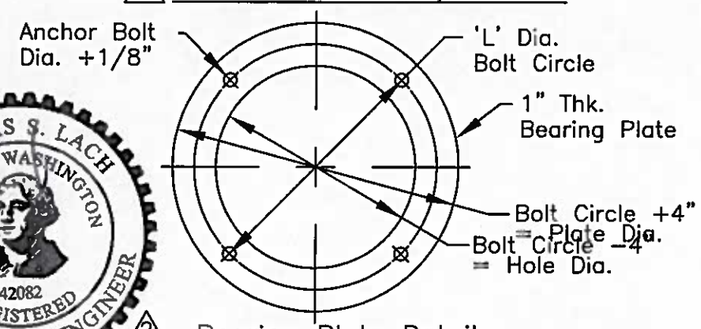

2 Bearing Plate Detail

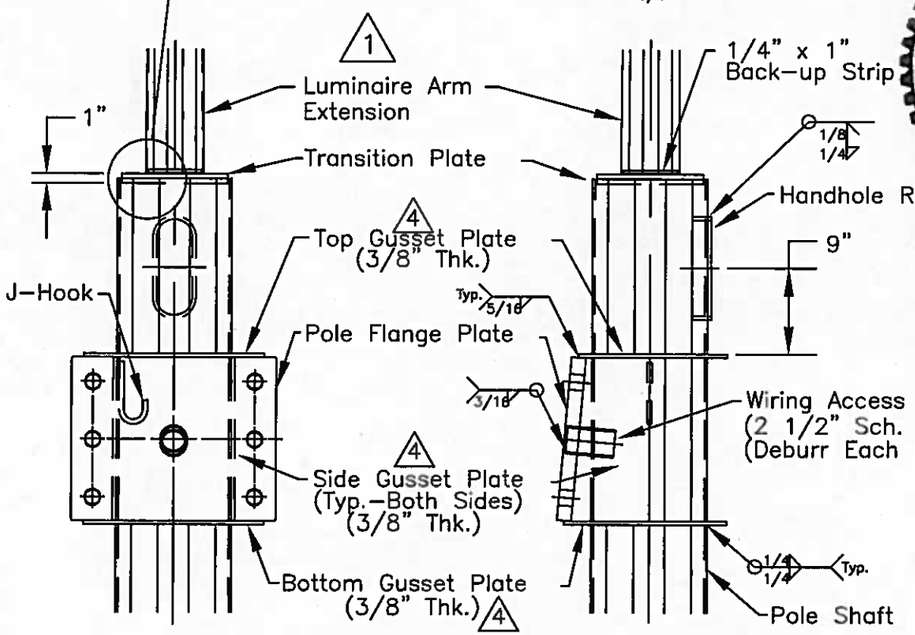

Type III Mast Head Detail

THOMAS S. LACH
STATE OF WASHINGTON
42082
REGISTERED
PROFESSIONAL ENGINEER
8/8/2015
Expires 11/17/2016

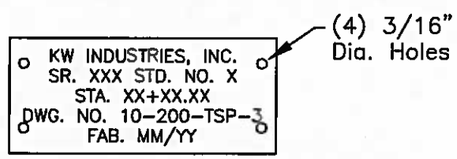

Identification Tag Detail

Material-14 Ga. Aluminum
Secure With (4) 1/8" Stainless Steel Rivets. 2
Letters To Be Stamped or Etched.
Minimum Letter Size-3/16".

REV:	DESCRIPTION:	BY:	DATE:
7	REVISED PER MARK UPS ERF# 14944	IF	8/6/2015
6	ADDED PIPE CALLOUT PER ERF# 13327	MI	8/7/2014
5	REVISED PER MARKUPS ON ERF# 8512	IF	3/23/2011
4	REVISED PER RETURNED MARKED-UP SUBMITTAL DRAWINGS.	JHG	11/17/2009
3	CHANGED REVISION NUMBER TO MATCH REVISION NUMBER ON SHT. 1 OF 3 PER WASHINGTON D.O.T. REQUEST.	JHG	11/5/2009
2	REVISED PER RETURNED MARKED-UP SUBMITTAL DRAWINGS.	JHG	8/24/2009
1	REVISED AS REQ'D. CHANGED LUMINAIRE ARM EXTENSION SHAFT MOUNTING TYPE FROM TELESCOPE MOUNTING TO BUTT-WELD MOUNTING W/BACK-UP STRIP.	JHG	2/19/2009

KW
909 INDUSTRIAL BLVD. •SUGAR LAND, TEXAS 77478

STATE OF WASHINGTON
TYPE III-T TRAFFIC SIGNAL STRUCTURES

SHT. 3 OF 3

DRAWN BY:	DATE:	DRAWING NO.:	REV:
JHG	1/26/2009	10-200-TSP-3	7
APPROVED BY:	DATE:		