APPROVED
Manufacturer's Pole Plan
Approved For Listing As A
Pre-Approved Drawing
WSDOT Bridge & Structures Office
By GB Date 9-8-11

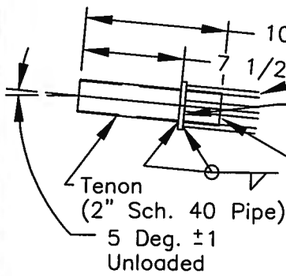

Luminaire Arm Tenon Detail

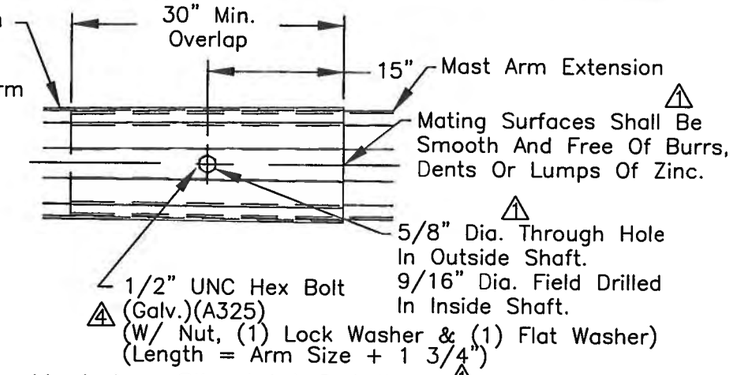

Mast Arm Slip Joint Detail

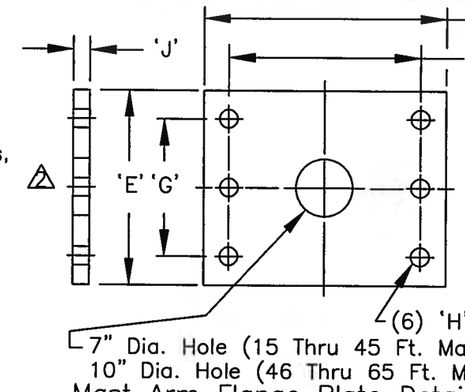

Mast Arm Flange Plate Detail

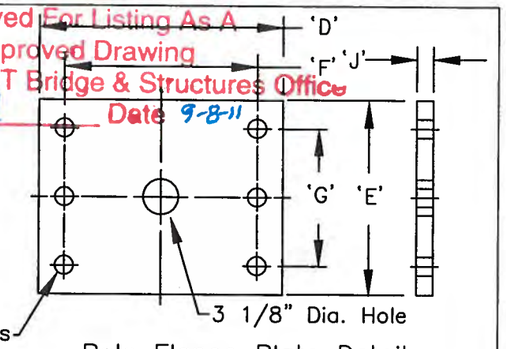

Pole Flange Plate Detail

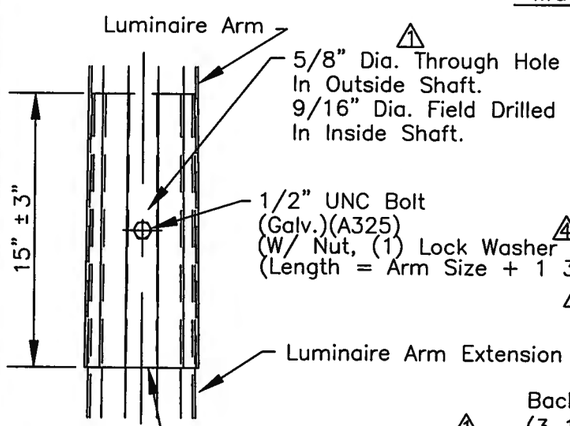

Luminaire Arm Slip Joint Detail

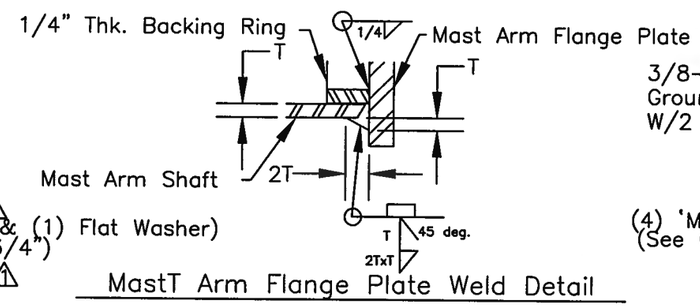

MastT Arm Flange Plate Weld Detail

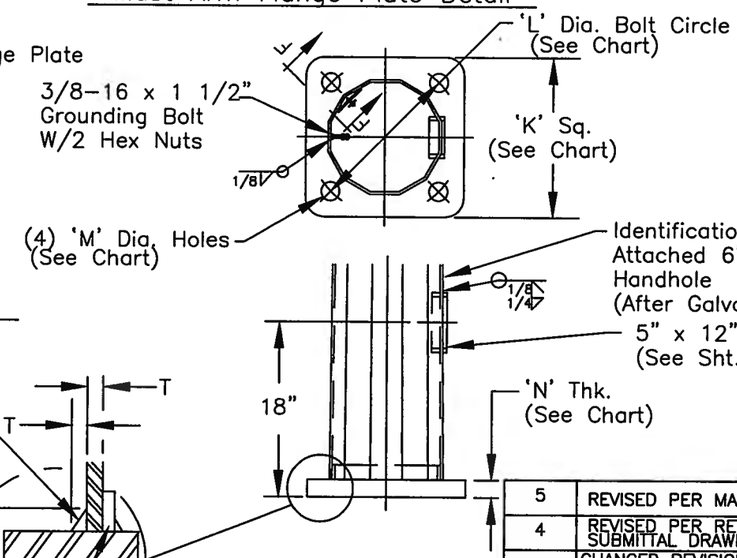

Base Plate Detail

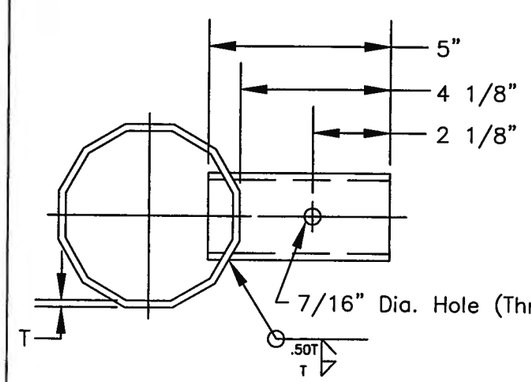

Typ. Mast Arm Tenon Detail

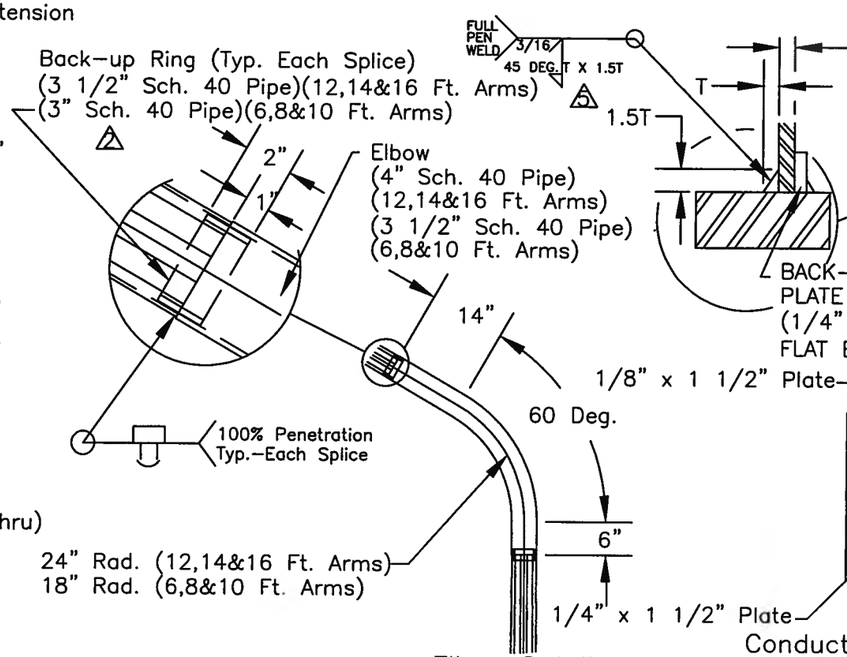

Elbow Detail

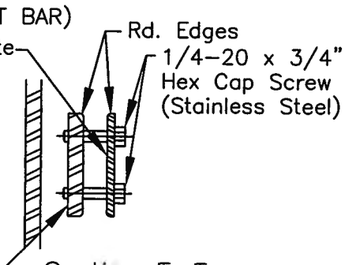

Section F-F
Conductor Mtg. Bracket Detail

THOMAS S. LACH
STATE OF WASHINGTON
42082
REGISTERED
PROFESSIONAL ENGINEER
5-25-11
Expires 11-17-12

REV:	DESCRIPTION:	BY:	DATE:
5	REVISED PER MARKUPS OM ERF# 8512	IF	3/23/2011
4	REVISED PER RETURNED MARKED-UP SUBMITTAL DRAWINGS.	JHG	11/17/2009
3	CHANGED REVISION NUMBER TO MATCH REVISION NUMBER ON SHT. 1 OF 3 PER WASHINGTON D.O.T. REQUEST.	JHG	11/5/2009
2	REVISED PER RETURNED MARKED-UP SUBMITTAL DRAWINGS.	JHG	9/17/2009
1	REVISED PER RETURNED MARKED-UP SUBMITTAL DRAWINGS.	JHG	8/24/2009

KW
909 INDUSTRIAL BLVD. •SUGAR LAND, TEXAS 77478

STATE OF WASHINGTON
TYPE III-T TRAFFIC SIGNAL STRUCTURES

SHT. 2 OF 3

DRAWN BY:	DATE:	DRAWING NO.:	REV:
JHG	1/26/2009	10-200-TSP-3	5
APPROVED BY:	DATE:		