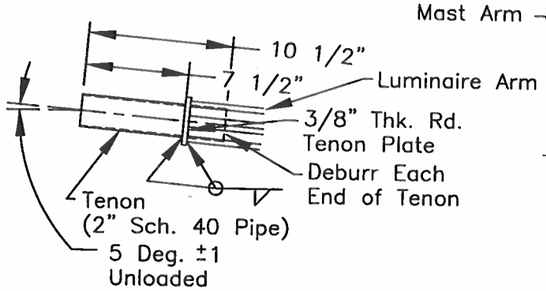

Luminaire Arm Tenon Detail

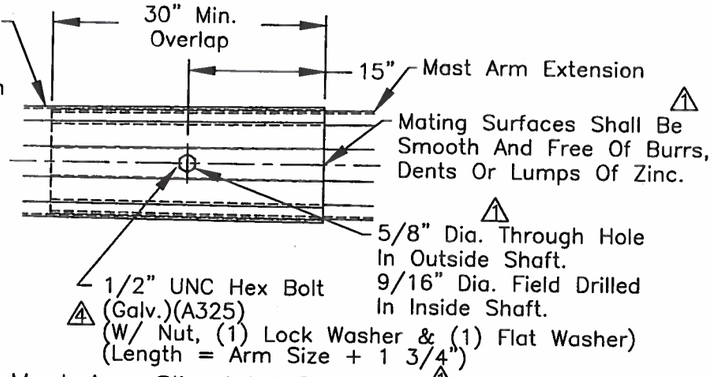

Mast Arm Slip Joint Detail

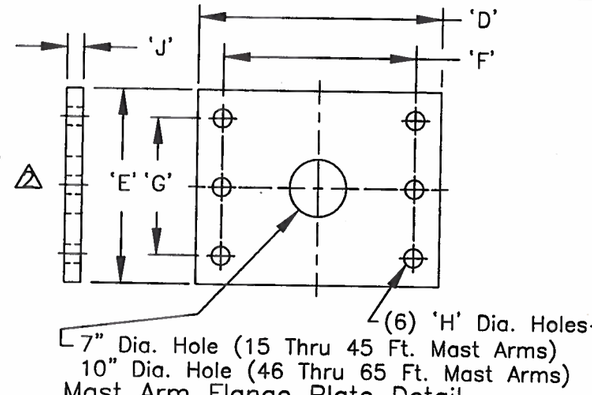

Mast Arm Flange Plate Detail

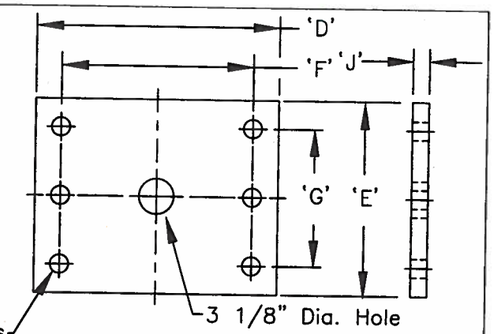

Pole Flange Plate Detail

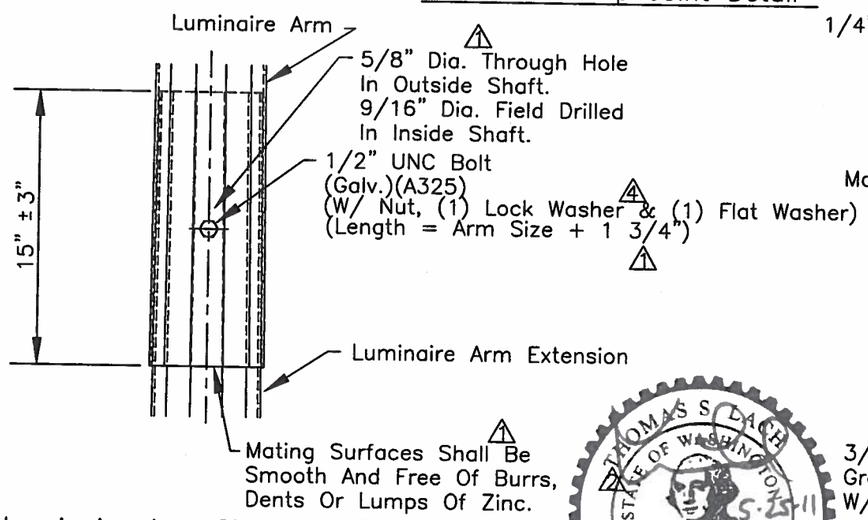

Luminaire Arm Slip Joint Detail

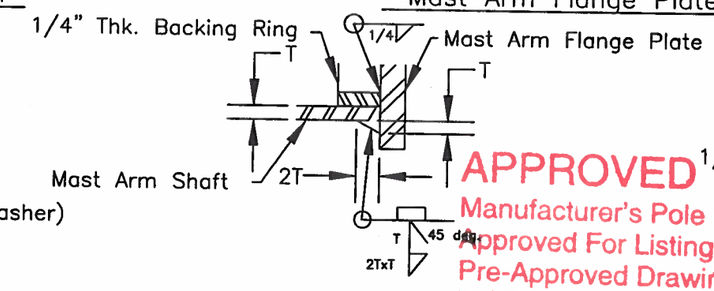

MastT Arm Flange Plate Weld Detail

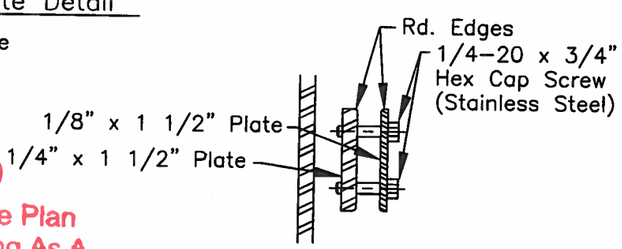

Section F-F

Conductor Mtg. Bracket Detail

APPROVED
Manufacturer's Pole Plan
Approved For Listing As A
Pre-Approved Drawing
WSDOT Bridge & Structures Office
By GB Date 5-25-2011

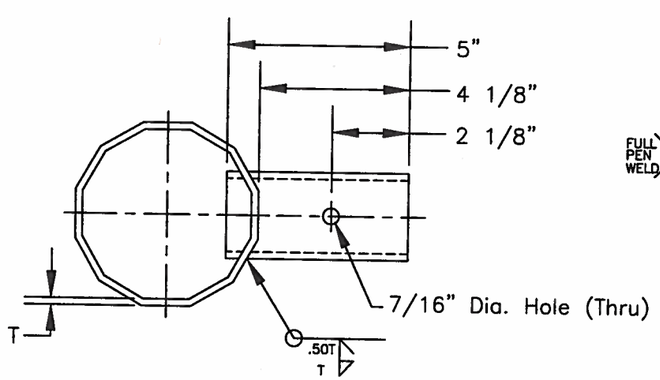

Typ. Mast Arm Tenon Detail

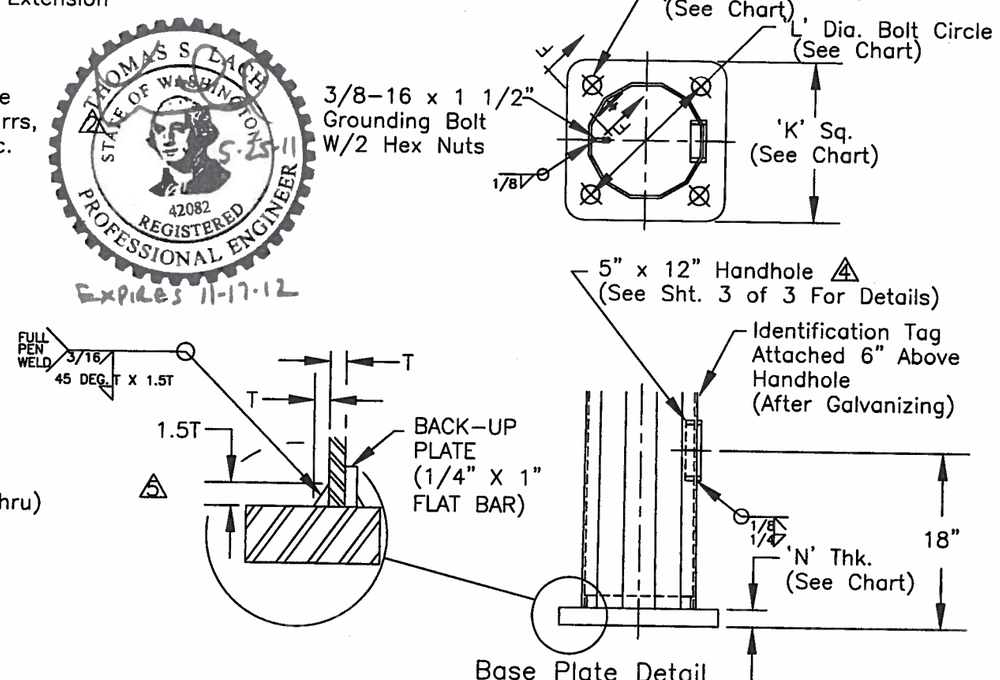

Base Plate Detail

THOMAS S. LACH
STATE OF WASHINGTON
42082
REGISTERED
PROFESSIONAL ENGINEER
5-25-11
EXPIRES 11-17-12

REV:	DESCRIPTION:	BY:	DATE:
5	REVISED PER MARKUPS PER ERF# 8511	IF	3/23/2011
4	REVISED PER RETURNED MARKED-UP SUBMITTAL DRAWINGS.	JHG	11/16/2009
3	CHANGED REVISION NUMBER TO MATCH REVISION NUMBER ON SHT. 1 OF 3 PER WASHINGTON D.O.T. REQUEST.	JHG	11/4/2009
2	REVISED PER RETURNED MARKED-UP SUBMITTAL DRAWINGS.	JHG	9/17/2009
1	REVISED PER RETURNED MARKED-UP SUBMITTAL DRAWINGS.	JHG	8/24/2009

KW
909 INDUSTRIAL BLVD. •SUGAR LAND, TEXAS 77478

STATE OF WASHINGTON
TYPE III TRAFFIC SIGNAL STRUCTURES

SHT. 2 OF 3

DRAWN BY:	DATE:	DRAWING NO.:	REV:
JHG	1/26/2009	10-200-TSP-2	5
APPROVED BY:	DATE:		