FOR APPROVAL ONLY

PRINT NAME: _____

SIGNATURE: _____

DATE: _____

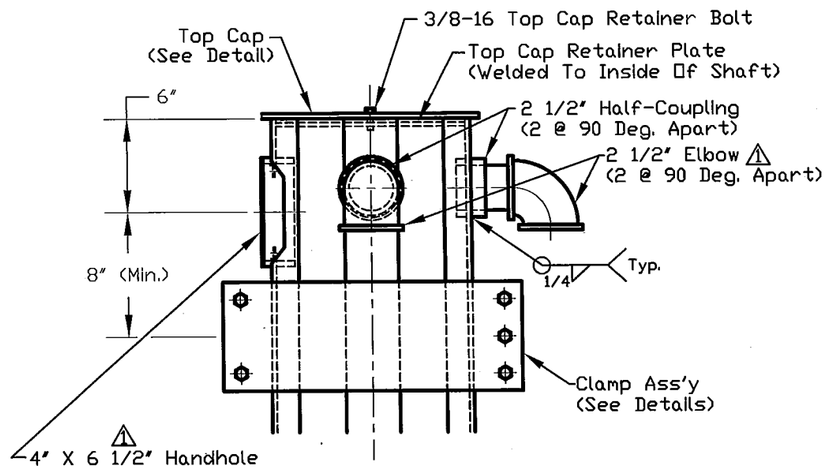

DETAIL 'B'

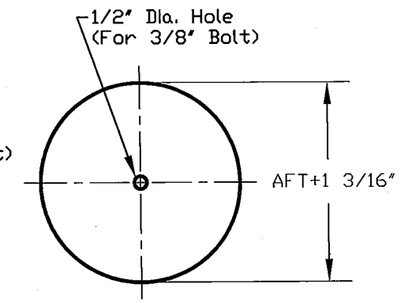

TOP CAP DETAIL

APPROVED
Manufacturer's Pole Plan
Approved For Listing As A
Pre-Approved Drawing
WSDOT Bridge & Structures Office
By GB Date 11-9-09

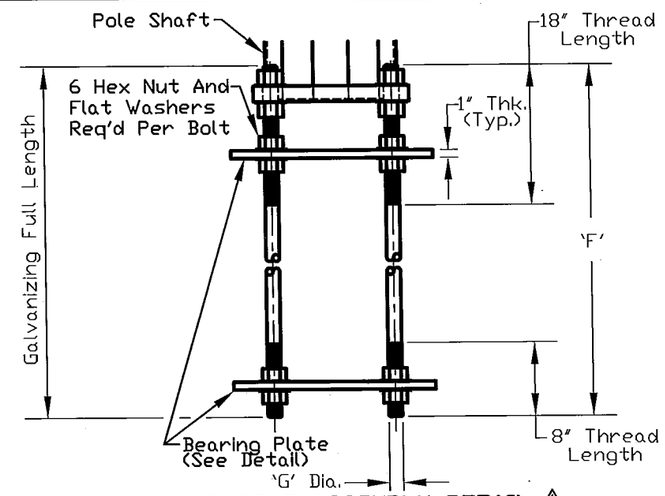

ANCHOR BOLT ASSEMBLY DETAIL ⚠

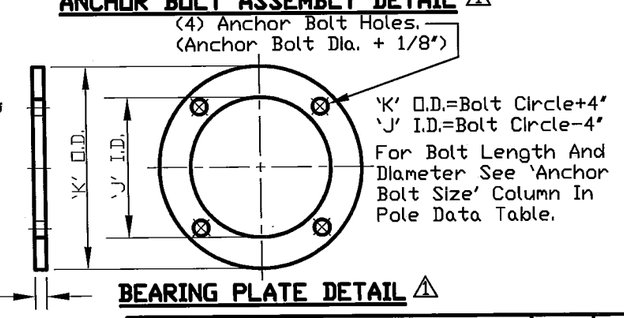

BEARING PLATE DETAIL ⚠

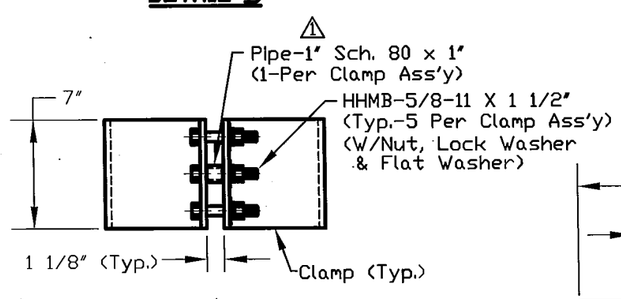

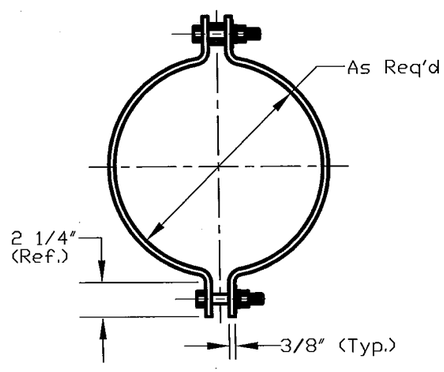

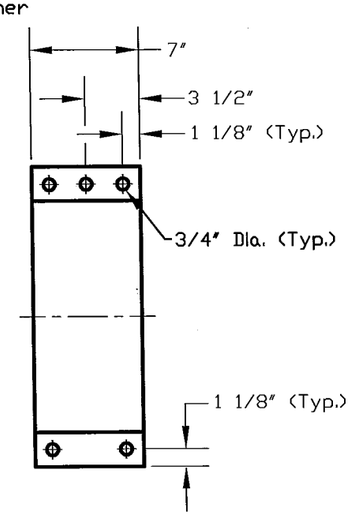

CLAMP ASSEMBLY DETAIL

REV.	DESCRIPTION	BY	DATE
4	CHANGED REVISION NUMBER TO MATCH REVISION NUMBER ON SHT. 1 OF 2 PER WASHINGTON D.O.T. REQUEST.	JHG	11/4/2009
1	REVISED PER RETURNED MARKED-UP DRAWING.	JHG	8/20/2009

KW

909 INDUSTRIAL BLVD. • SUGAR LAND, TEXAS 77478

STATE OF WASHINGTON
TYPE IV STRAIN POLE
CLASS 1900 LB. TO 7200 LB.

2 OF 2

DRAWN BY:	DATE:	DRAWING NO:	REV:
JHG	1/8/2008	10-200-SP-1	4
APPROVED BY:	DATE:		

E:\CAD\10 Submittal Drawings\10-200\10-200-SP-1-4 (2 OF 2) .dwg, 11/4/2009 2:57:52 PM, jim.grein