THOMAS S. MACH
STATE OF WASHINGTON
42082
REGISTERED
PROFESSIONAL ENGINEER
11-9-09

**APPROVED**
Manufacturer's Pole Plan
Approved For Listing As A
Pre-Approved Drawing
WSDOT Bridge & Structures Office
By GB Date 11-9-09

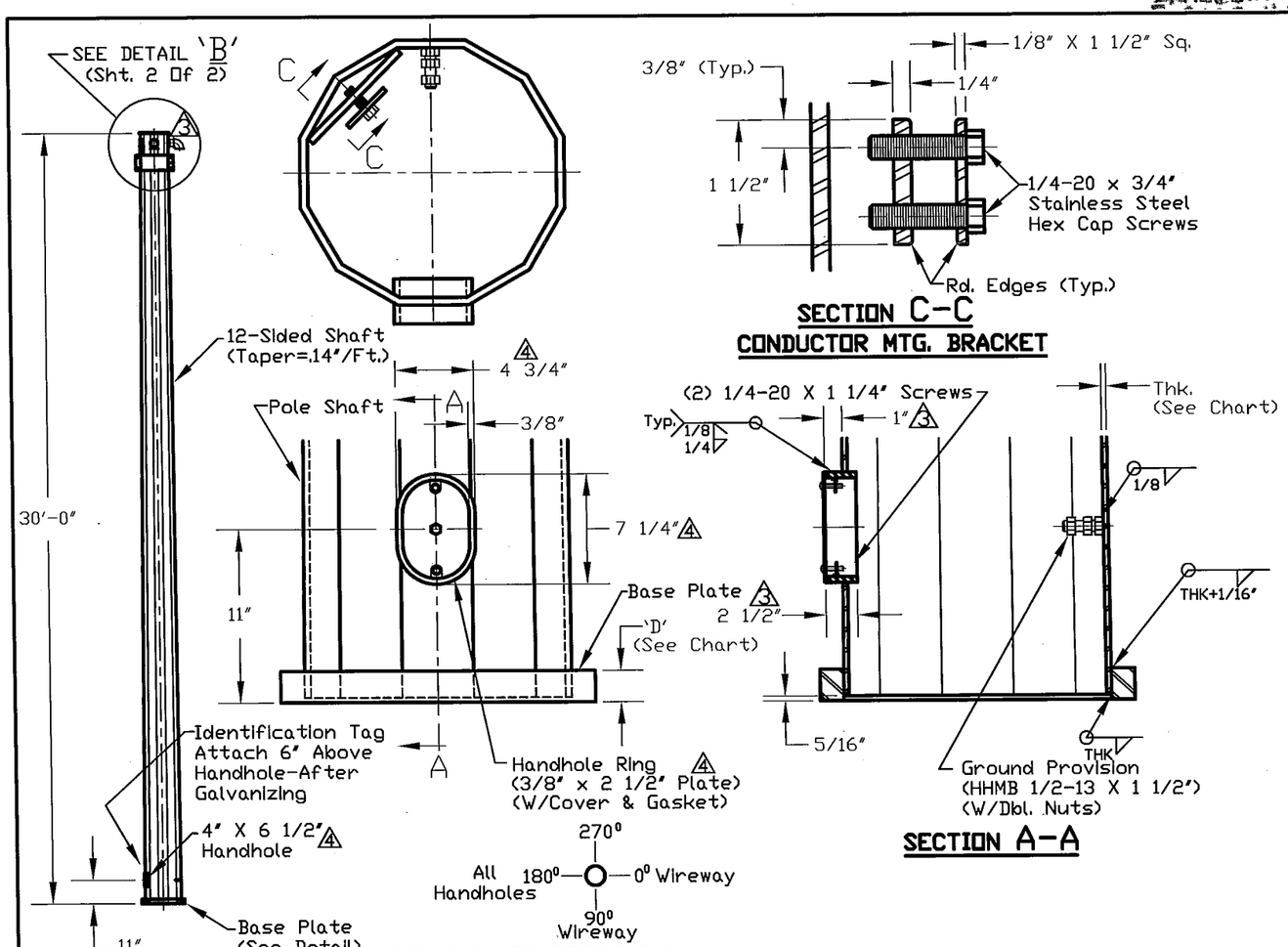


POLE SHAFT ORIENTATION DETAIL

NOTES:

Weld: Welding Of Structures Shall Be In Accordance With The Current AWS Structural Welding Code D1.1. Longitudinal Seam Welds Are 60% Minimum Penetration Except In 6 Inches From End Of Flange Which Is To Be 100% Penetration.

Finish: All Components To Be Hot Dip Galvanized As Per ASTM A123 & A153.

KW INDUSTRIES
DWG. NO. 10-200-SP-1
STRAIN POLE TYPE IV FAB.
LOAD CLASS XXXX LBS. MM/YY

I.D. TAG DETAIL

MAT'L-14 GA. ALUMINUM SECURE TO POLE WITH TWO 1/8" SS RIVETS OR SCREWS. LETTERS TO BE STAMPED OR ENGRAVED. MINIMUM LETTER HEIGHT=3/16".

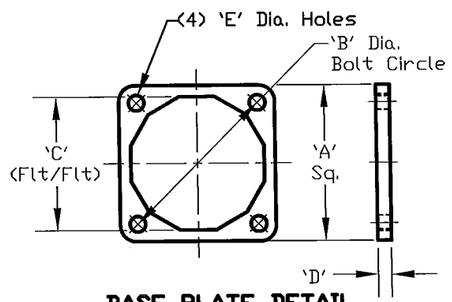


BASE PLATE DETAIL

| Pole Class | POLE SHAFT | | | | BASE PLATE | | | | | ANCHOR BOLTS | | BEARING PLATE | | |
|---|---|---|---|---|---|---|---|---|---|---|---|---|---|---|
| | AFB* (In.) | AFT* (In.) | THK (In.) | Shaft Length (Ft.) | 'A' (In.) | 'B' (In.) | 'C' (In.) | 'D' (In.) | 'E' (In.) | 'F' Length (In.) | 'G' Dia. (In.) | 'H' (In.) | 'J' I.D. (In.) | 'K' O.D. (In.) |
| 1900 LB | 10.0 | 5.8125 | .250 | 30.0 | 15.0 | 16.0 | 10.125 | 1.75 | 1.375 | 48.0 | 1.125 | 1 | 12.0 | 20.0 |
| 2700 LB | 12.0 | 7.8125 | .3125 | 30.0 | 15.5 | 16.5 | 12.125 | 1.75 | 1.625 | 60.0 | 1.375 | 1 | 12.5 | 20.5 |
| 3700 LB | 14.0 | 9.8125 | .3125 | 30.0 | 18.0 | 19.0 | 14.125 | 1.75 | 1.75 | 60.0 | 1.50 | 1 | 15.0 | 23.0 |
| 4800 LB | 14.0 | 9.8125 | .3125 | 30.0 | 19.0 | 20.0 | 14.125 | 2.00 | 2.00 | 66.0 | 1.75 | 1 | 16.0 | 24.0 |
| 5600 LB | 15.0 | 10.8125 | .3125 | 30.0 | 20.0 | 21.0 | 15.125 | 2.00 | 2.00 | 66.0 | 1.75 | 1 | 17.0 | 25.0 |
| 6300 LB | 16.0 | 11.8125 | .3125 | 30.0 | 20.0 | 22.0 | 16.125 | 2.25 | 2.00 | 66.0 | 1.75 | 1 | 18.0 | 26.0 |
| 7200 LB | 17.0 | 12.8125 | .3125 | 30.0 | 20.0 | 22.0 | 17.125 | 2.25 | 2.00 | 66.0 | 1.75 | 1 | 18.0 | 26.0 |

*-AFB Across Flats @ Base of Shaft.

*-AFT Across Flats @ Top of Shaft.

| MATERIAL DATA (UNLESS OTHERWISE NOTED) | |
|---|---|
| COMPONENT | GRADE |
| HANDHOLE RING PLATE | ASTM A36, Gd. 36 |
| TAPERED TUBES | ASTM A-572, A-1011, A-606, Gd. 50 (MIN.) |
| BASE PLATE | ASTM A-572, Gd. 42 (MIN.) |
| STRAIN CLAMP | ASTM A-36 |
| ANCHOR BOLTS | ASTM F1554, Gd 105 |
| CLAMP BOLTS | ASTM A-325,TYPE 1 |
| NUTS | ASTM A-563-DH |
| FLAT WASHERS | ASTM F436 |

| REV. | DESCRIPTION | BY | DATE |
|---|---|---|---|
| 4 | REVISED PER RETURNED MARKED-UP DRAWING. | JHG | 10/20/2009 |
| 3 | REVISED PER RETURNED MARKED-UP DRAWING. | JHG | 8/20/2009 |
| 2 | REVISED PER LACH ENGINEERING REVISIONS. A-606 WAS A-607. | JHG | 2/19/2009 |
| 1 | REVISED PER LACH ENGINEERING REVISIONS. | JHG | 10/8/2008 |

KW
909 INDUSTRIAL BLVD. • SUGAR LAND, TEXAS 77478

**STATE OF WASHINGTON**
**TYPE IV STRAIN POLE**
**CLASS 1900 LB. TO 7200 LB.**

1 OF 2

| DRAWN BY: | DATE: | DRAWING NO.: | REV: |
|---|---|---|---|
| JHG | 1/8/2008 | 10-200-SP-1 | 4 |
| APPROVED BY: | DATE: | | |

E:\CAD\10 Submittal Drawings\10-200\10-200-SP-1-4 (1 OF 2) .dwg, 10/20/2009 9:01:23 AM, jim.grein