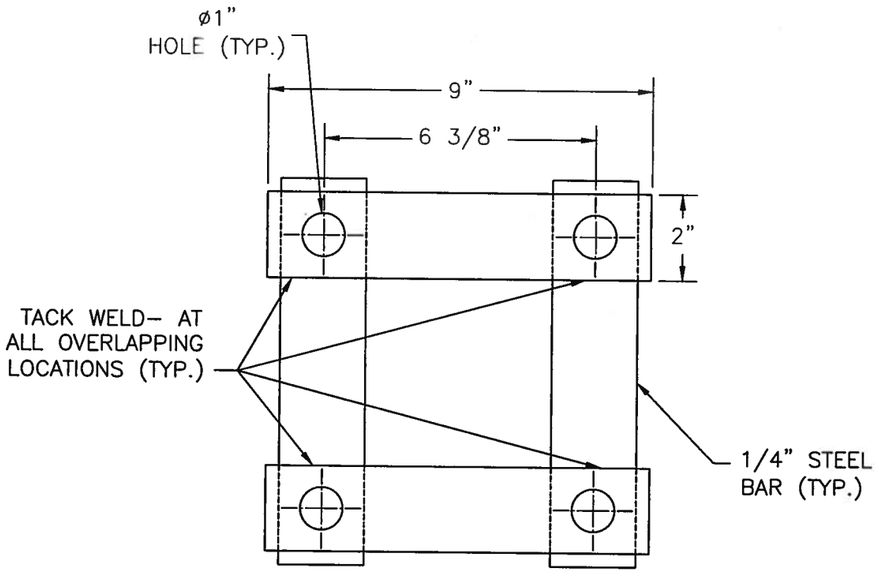

STRAP TEMPLATE DETAIL
FOR PS AND
TYPE 1 POLES 7
(FIXED BASE)

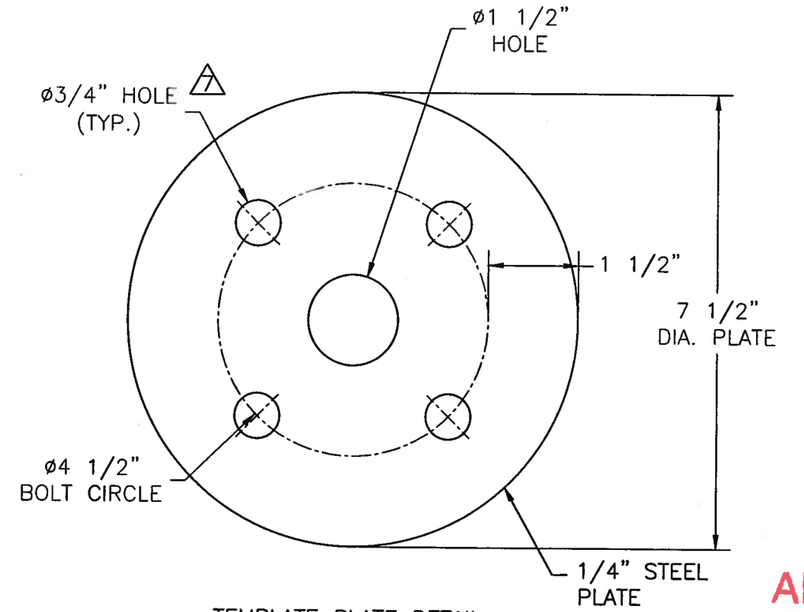

TEMPLATE PLATE DETAIL
FOR TYPE PPB POLE 7
(FIXED BASE)

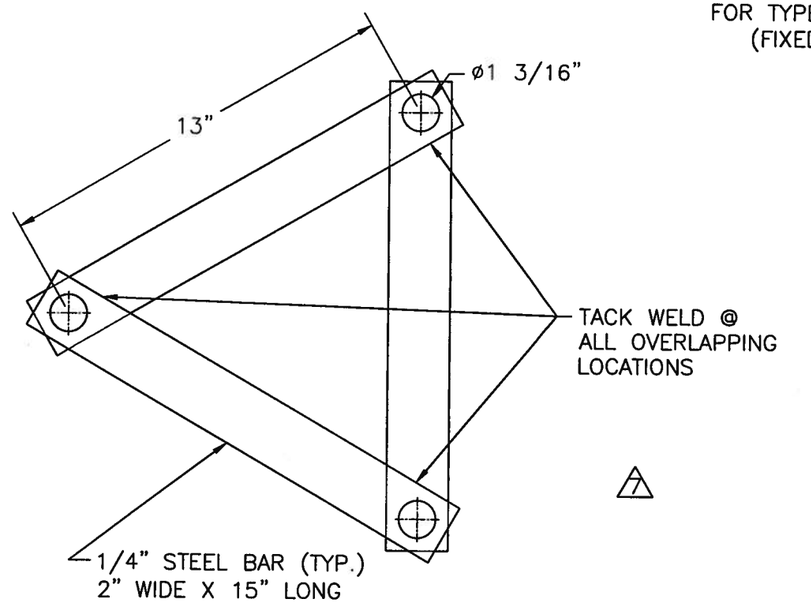

STRAP TEMPLATE DETAIL
FOR RM AND FLASHING
BEACON POLES
(SLIP BASE)

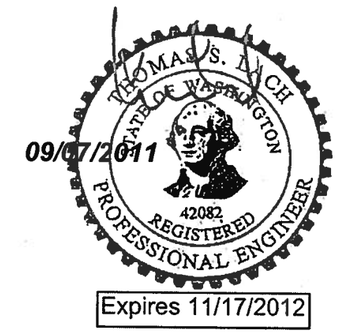

APPROVED
Manufacturer's Pole Plan
Approved For Listing As A
Pre-Approved Drawing
WSDOT Bridge & Structures Office
By GB Date 9-8-2011

REV:	DESCRIPTION:	BY:	DATE:
7	REVISED PER MARKUPS ON ERF# 8826	IF	6/15/2011
6	REVISED PER MARKUPS ON ERF# 8514	IF	3/23/2011
5	REVISED PER GARY BEDI E–MAIL.	JHG	12/1/2009
4	ADDED I.D. TAG.	JHG	11/24/2009
3	CHANGED REVISION NUMBER TO MATCH REVISION NUMBER ON SHT. 1 OF 2 PER WASHINGTON D.O.T. REQUEST.	JHG	11/4/2009
2	REVISED PER RETURNED MARKED–UP DRAWING.	JHG	10/20/2009
1	REVISED PER RETURNED MARKED–UP DRAWING.	JHG	8/19/2009

KW
909 INDUSTRIAL BLVD. •SUGAR LAND, TEXAS 77478

STATE OF WASHINGTON
PEDESTRIAN POLES

3 OF 3

DRAWN BY: IF	DATE: 3/23/2011	DRAWING NO.: 10–200–PED–1	REV: 7
APPROVED BY:	DATE:		