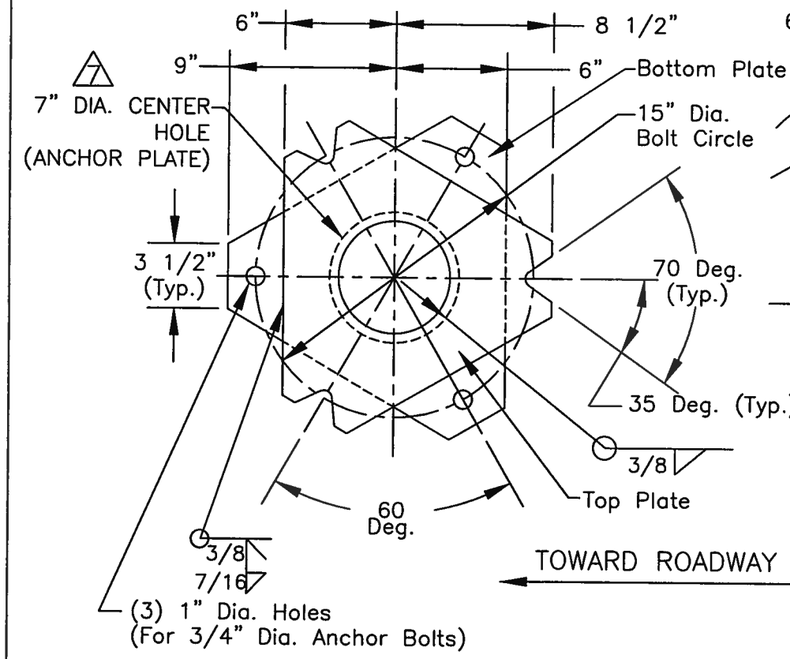

SLIP BASE ASSEMBLY DETAIL

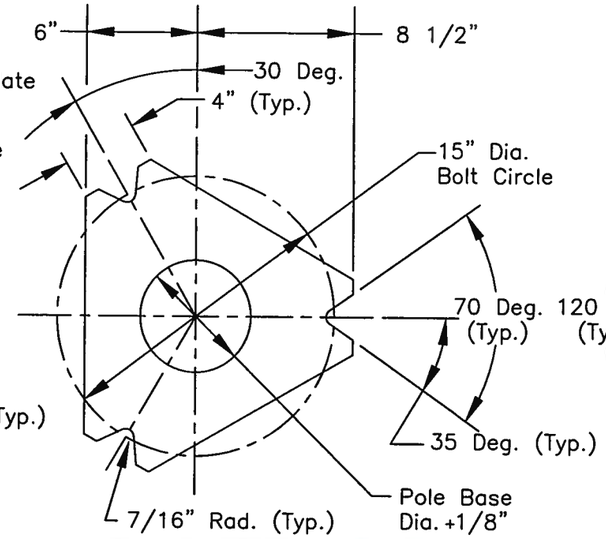

BASE PLATE DETAIL

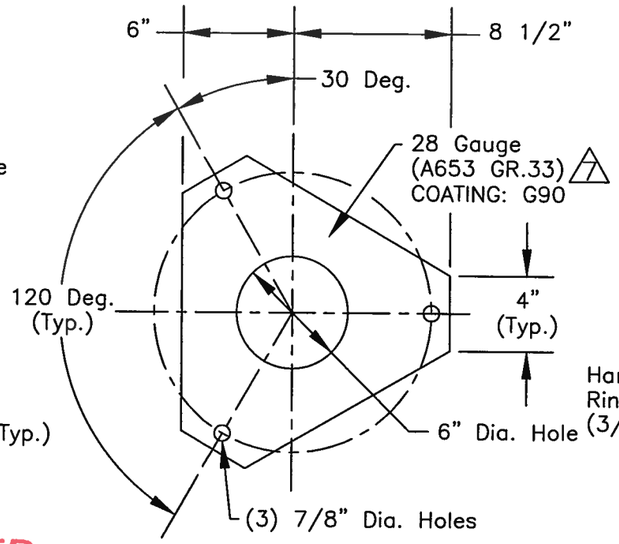

KEEPER PLATE DETAIL

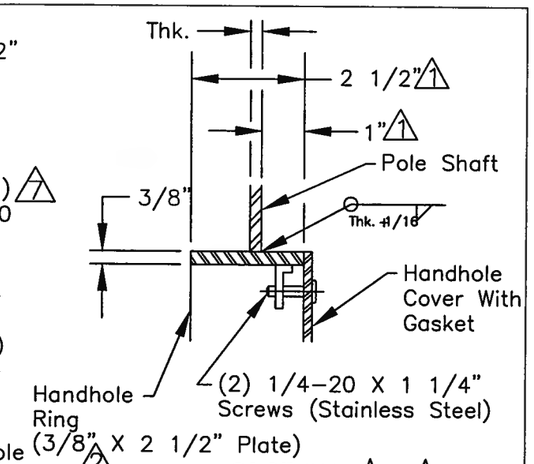

SECTION A–A

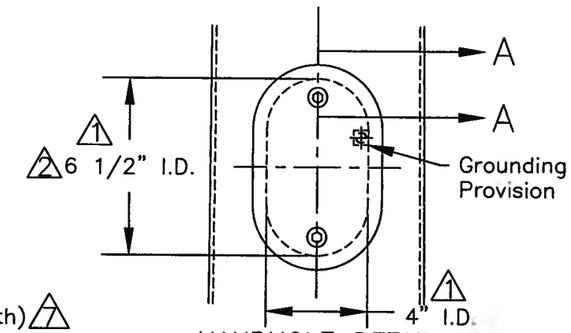

HANDHOLE DETAIL

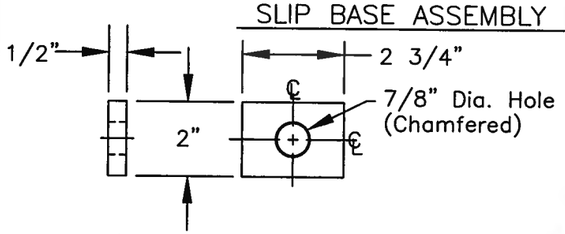

PLATE WASHER DETAIL

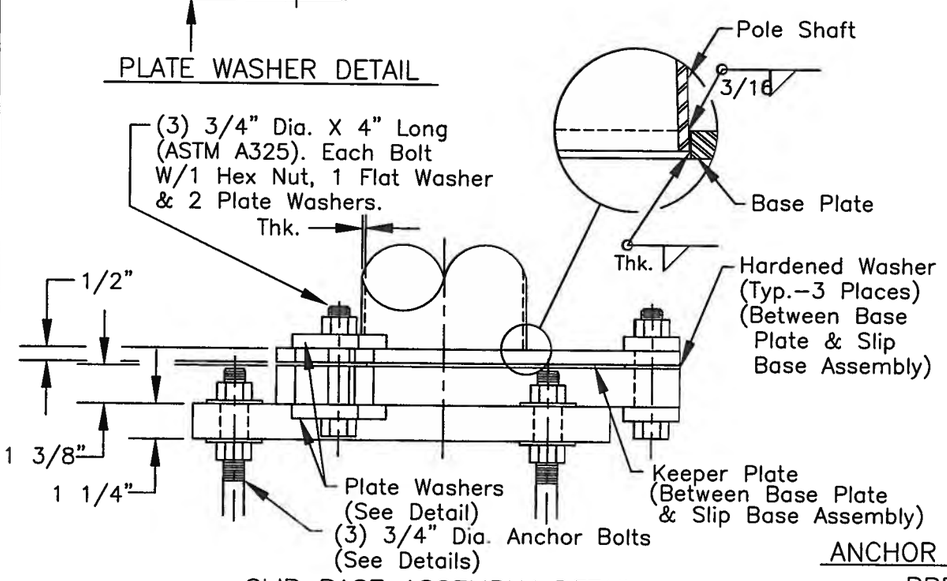

SLIP BASE ASSEMBLY DETAIL

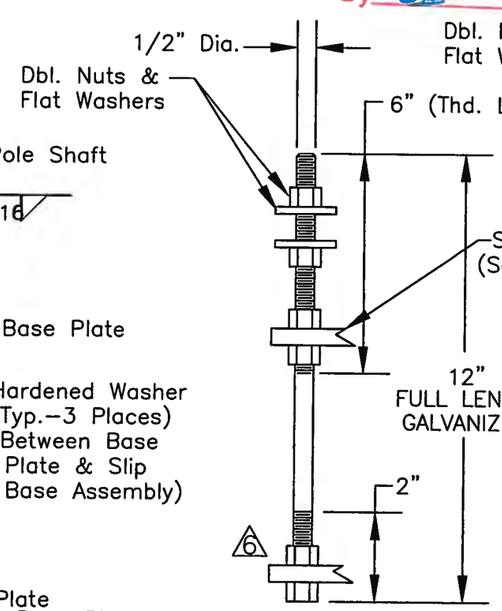

ANCHOR BOLT DETAIL
PPB POLE

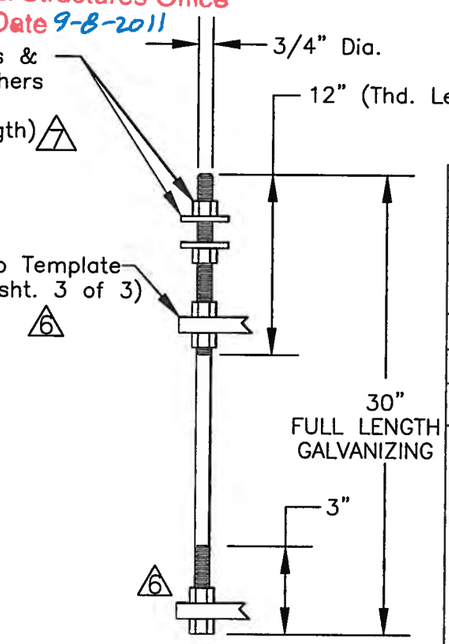

ANCHOR BOLT DETAIL
PS, TYPE I, RM & FLASHING BEACON POLE

APPROVED
Manufacturer's Pole Plan
Approved For Listing As A
Pre-Approved Drawing
WSDOT Bridge & Structures Office
By GB Date 9-8-2011

REV:	DESCRIPTION:	BY:	DATE:
7	REVISED PER MARKUPS ON ERF# 8866	IF	6/15/2011
6	REVISED PER MARKUPS ON ERF# 8514	IF	3/23/2011
5	REVISED PER GARY BEDI E-MAIL.	JHG	12/1/2009
4	ADDED I.D. TAG.	JHG	11/24/2009
3	CHANGED REVISION NUMBER TO MATCH REVISION NUMBER ON SHT. 1 OF 2 PER WASHINGTON D.O.T. REQUEST.	JHG	11/4/2009
2	REVISED PER RETURNED MARKED-UP DRAWING.	JHG	10/20/2009
1	REVISED PER RETURNED MARKED-UP DRAWING.	JHG	8/19/2009

KW
909 INDUSTRIAL BLVD. •SUGAR LAND, TEXAS 77478

THOMAS S. LACH
STATE OF WASHINGTON
42082
REGISTERED PROFESSIONAL ENGINEER
09/07/2011
Expires 11/17/2012

STATE OF WASHINGTON
PEDESTRIAN POLES

2 OF 3

DRAWN BY:	DATE:	DRAWING NO.:	REV:
JHG	1/9/2008	10-200-PED-1	7
APPROVED BY:	DATE:		